Carbon

Design for DLS

Connector Case Study

Presented at the AMUG 2018 Conference
St. Louis, Missouri
April 8–12, 2018

Dee Kerr
Head of Customer Education
Carbon
© Carbon Inc. 2018.

Design for DLS

Connector Case Study Overview

In this case study, we will walk through the process of adjusting a connector design to suit the DLS printing process.

- DLS Overview
- Redesign Elements
  - Vent holes
  - Drain holes
  - Fillets and chamfers
  - Gussets
  - Increase thickness
  - Shorten overhangs
  - Reduce mass
  - Modify feature geometry
- Application Assessment
- Connector Design Iterations

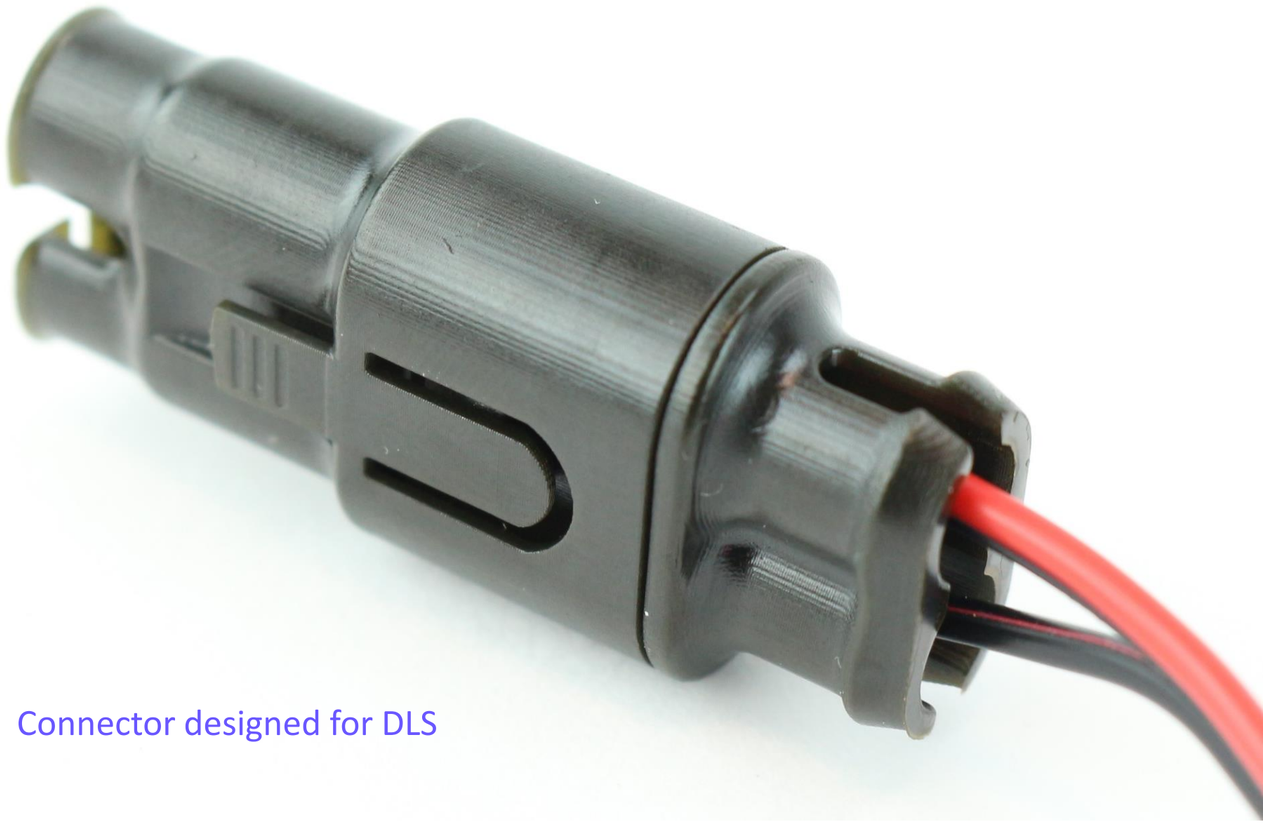

Connector designed for DLS

DLS Overview

DLS (Digital Light Synthesis™), enabled by Carbon's proprietary CLIP technology, is a breakthrough process that uses digital light projection, oxygen permeable optics, and programmable liquid resins to produce parts with excellent mechanical properties, resolution, and surface finish.

CLIP (Continuous Liquid Interface Production) is a photochemical process that carefully balances light and oxygen to produce parts with isotropic material properties. It works by projecting light through an oxygen-permeable window into a reservoir of UV-curable resin. As a sequence of UV images is projected, the part solidifies and the build platform rises.

Once a part is printed, it is baked in a forced-circulation oven. Heat sets off a secondary chemical reaction that gives parts their ultimate mechanical properties.

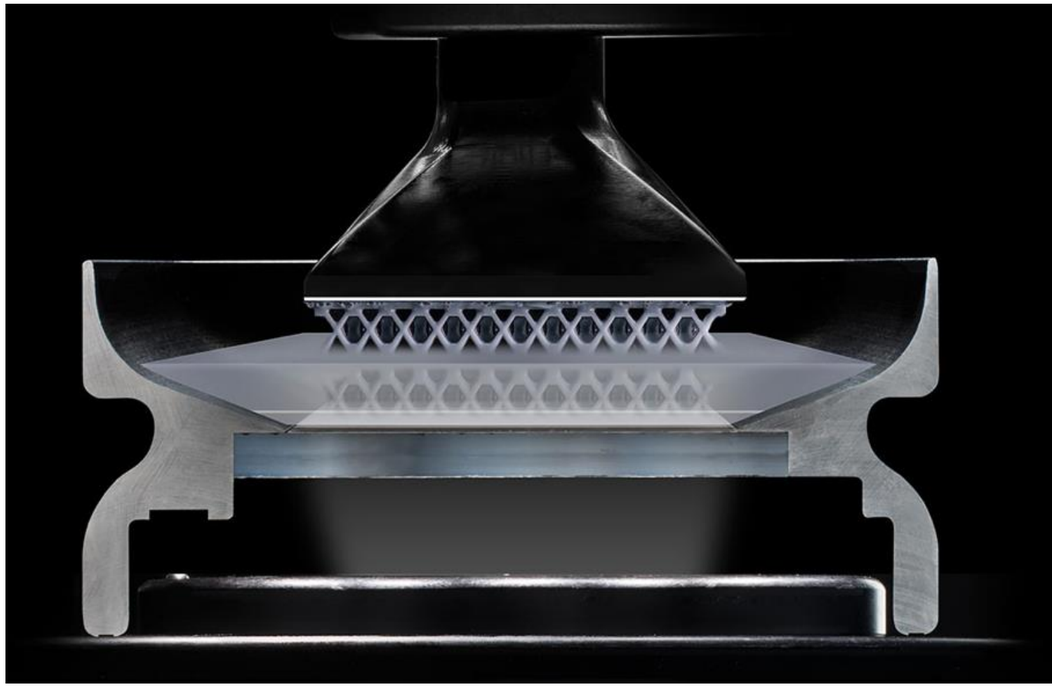


Carbon

DLS Workflow Overview

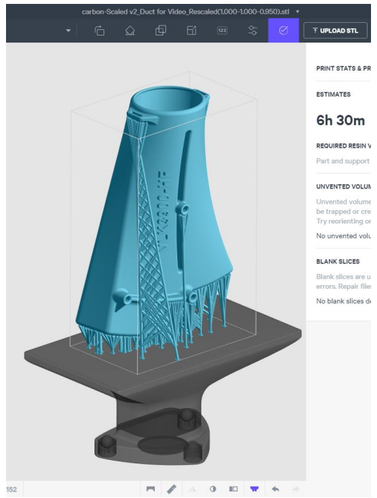

FILE PREP

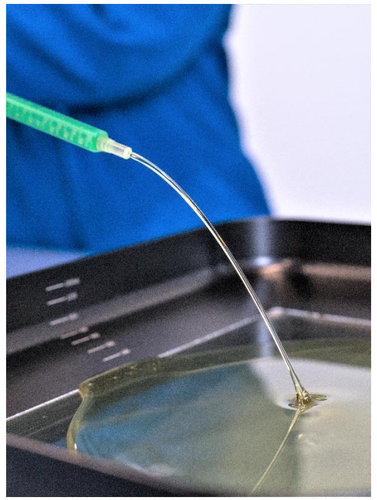

RESIN DISPENSING

PRINTING

WASHING

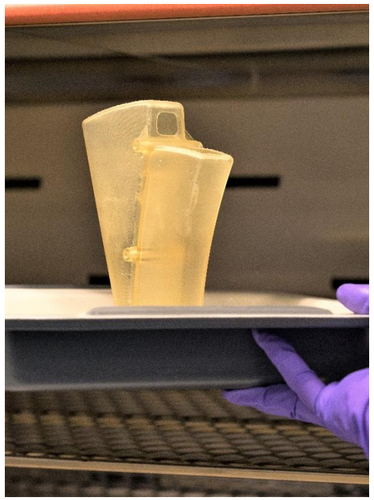

CURING

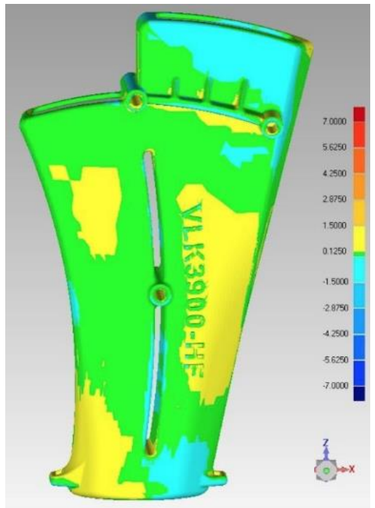

QC

Redesign Elements

Vent Holes

Provide a place for air to escape during printing to avoid a pressure buildup.

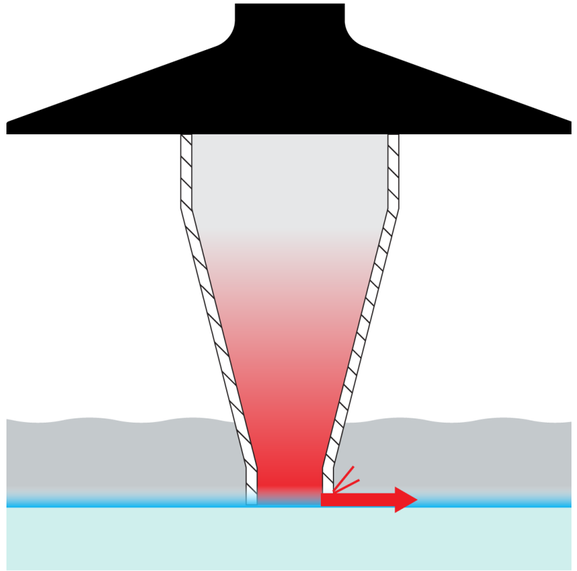

Fig. 1: Unvented part on platform. Part sucks up resin. Weight of resin increases during print, causing eventual **part failure** as resin bursts through part wall.

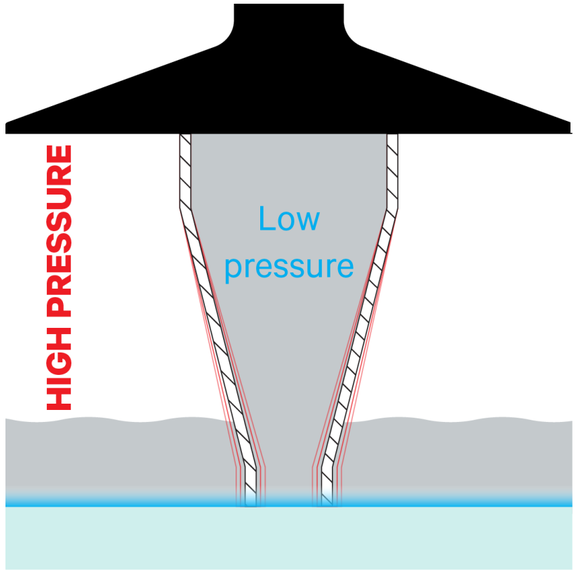

Fig. 2: Unvented volume causes wall instability, leading to fringing on part surfaces.

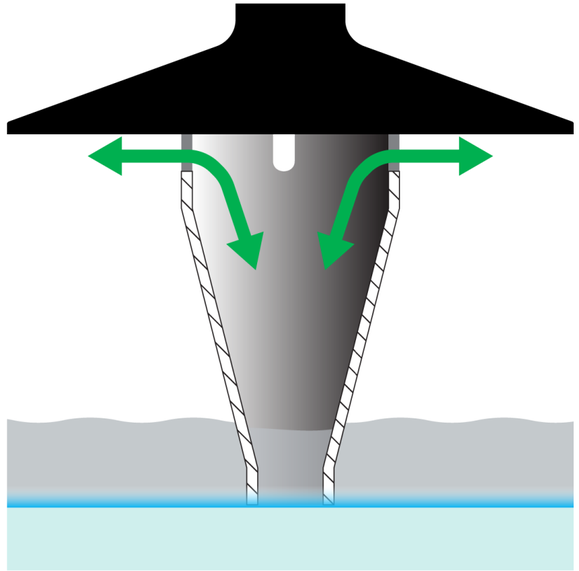

Fig. 3: Part on platform with vents **Vent holes** around base of part equalize pressure and prevent development of vacuum.

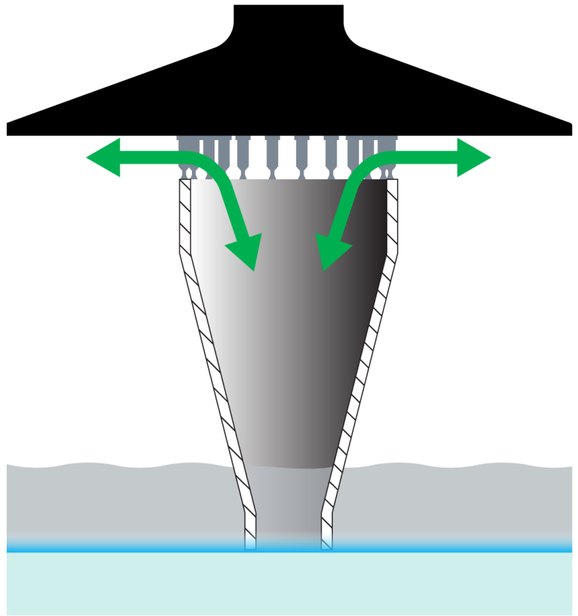

Fig. 4: Part above platform on **supports** Lifting part onto supports creates many vents.

Drain Holes

Provide a place for liquid resin to drain out to optimize washing in post-processing.

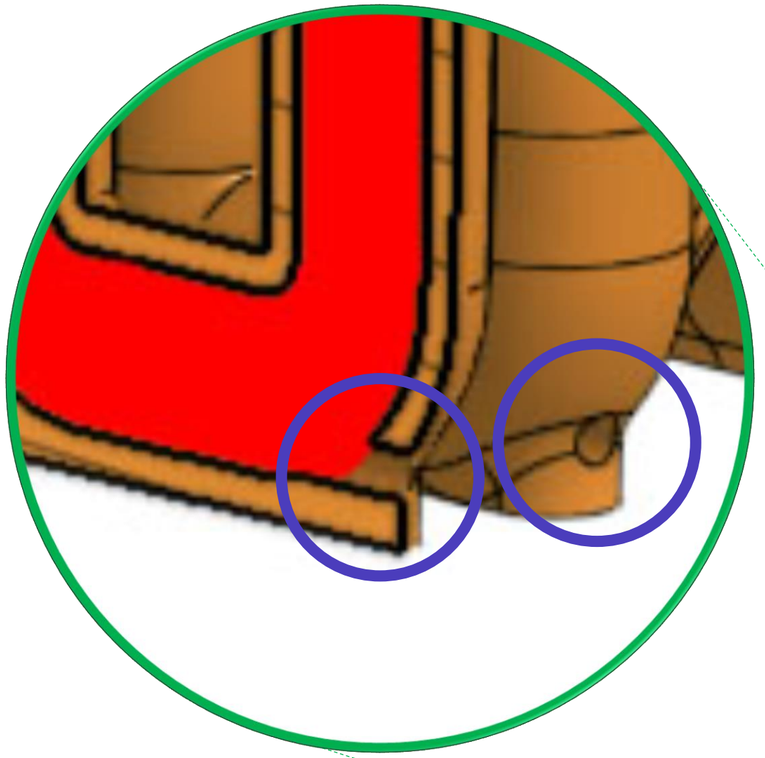

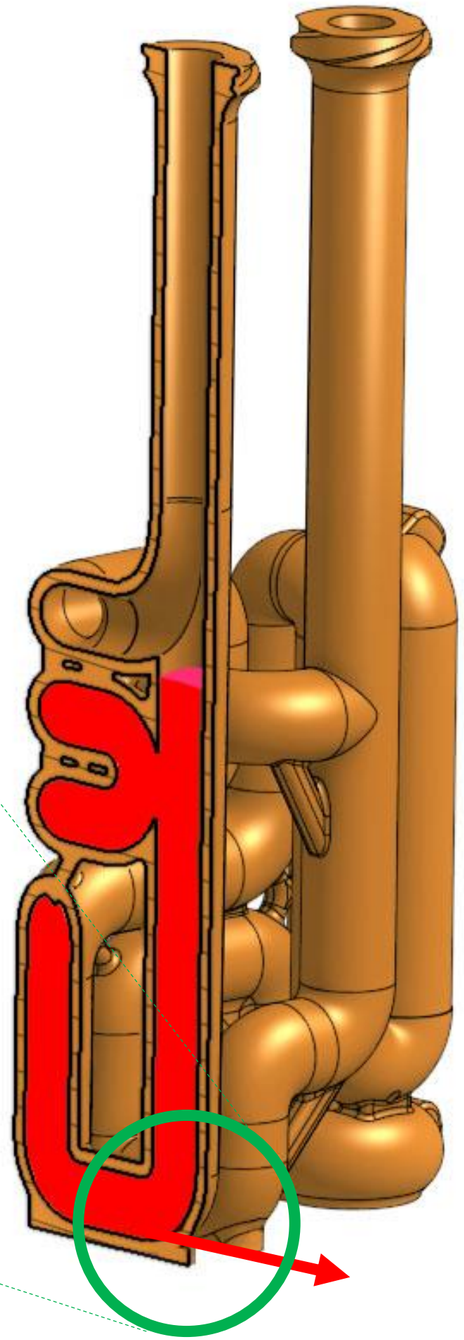

Fillets and Chamfers

- As internal stress relief
  - Prevent cracking
  - Minimize warping
- To improve resin flow
- To provide gradual cross section

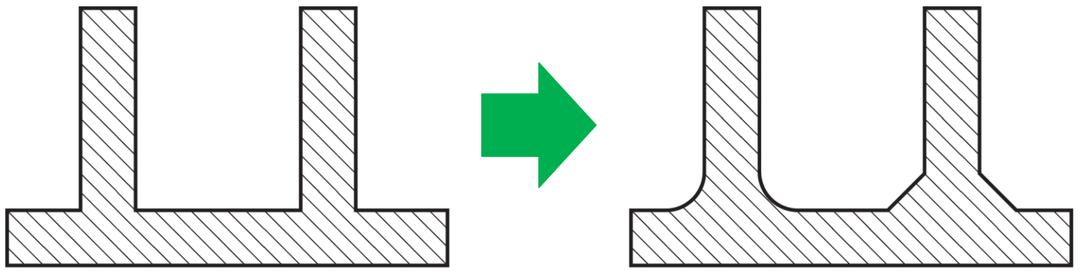

Fig. 1: Add fillets or chamfers to corners

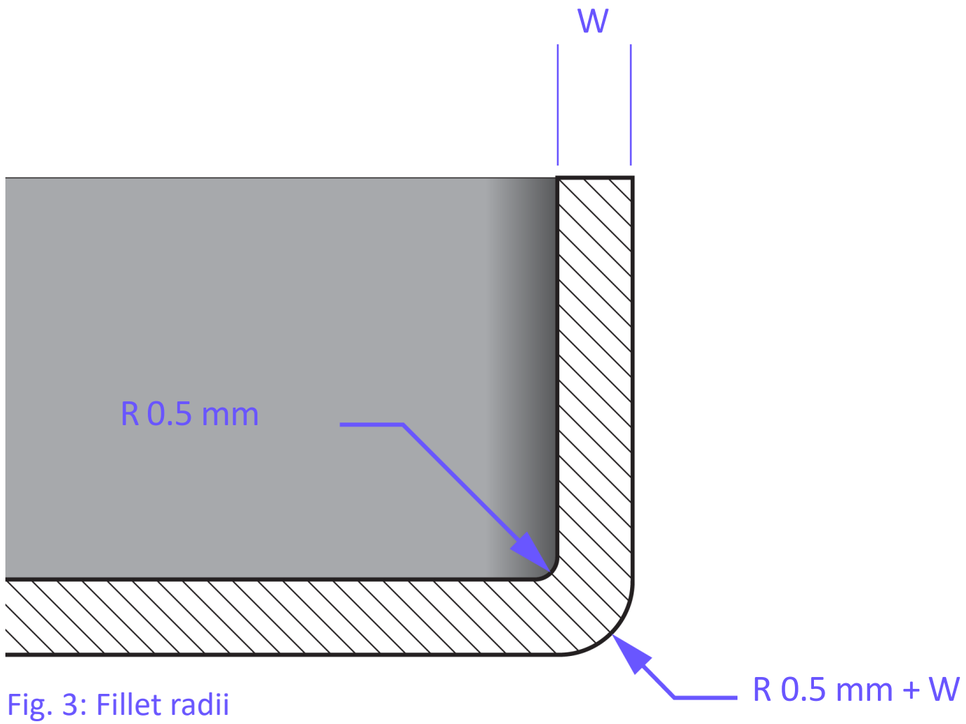

Fig. 3: Fillet radii

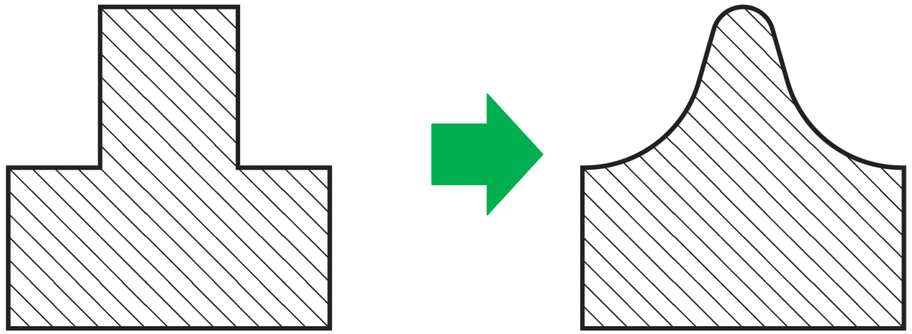

Fig. 2: Gradual transitions instead of steps

Gussets

- To create self-supporting features
- To provide gradual cross section

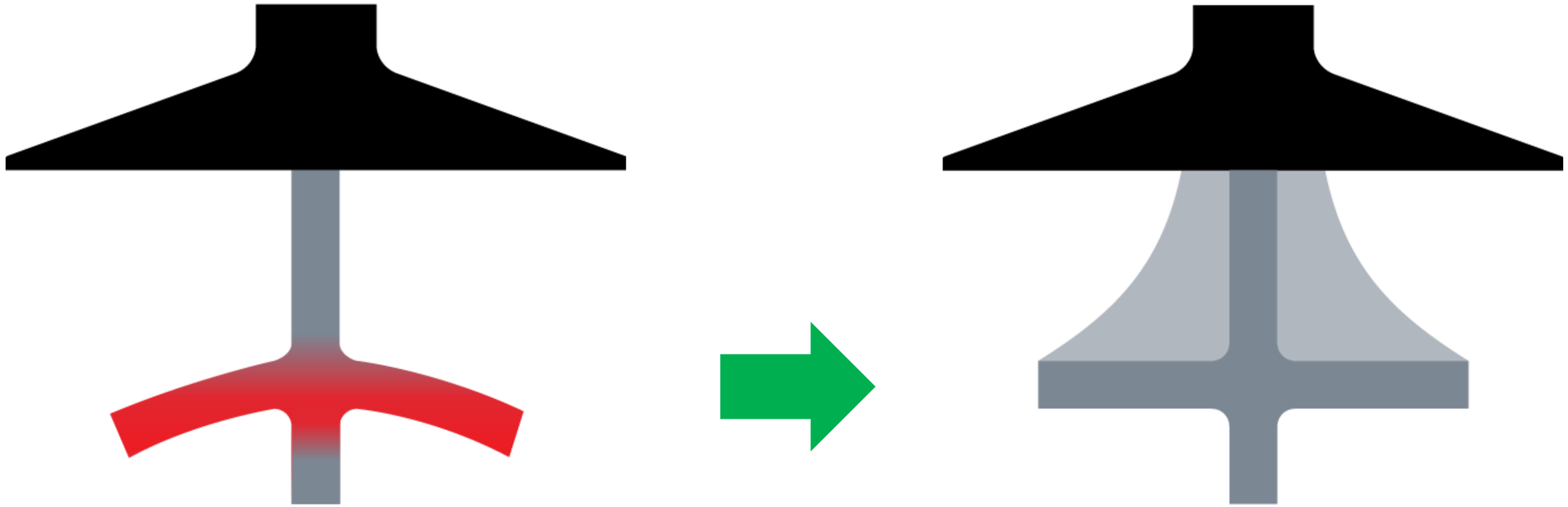

Large under-supported overhangs will deform.

Add support structures to stabilize overhangs.

Increase Thickness

- To create self-supporting features
  - To prevent sagging
  - To eliminate need for supports
- To provide best feature accuracy
  - Prevent warping
  - Prevent shrinkage

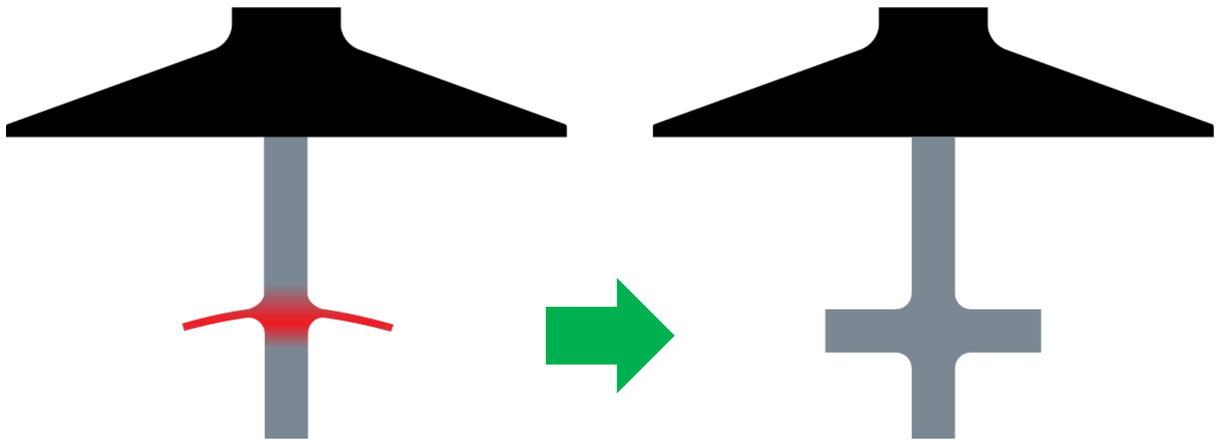

Thin features deform during printing.

Thickened features resist sagging.

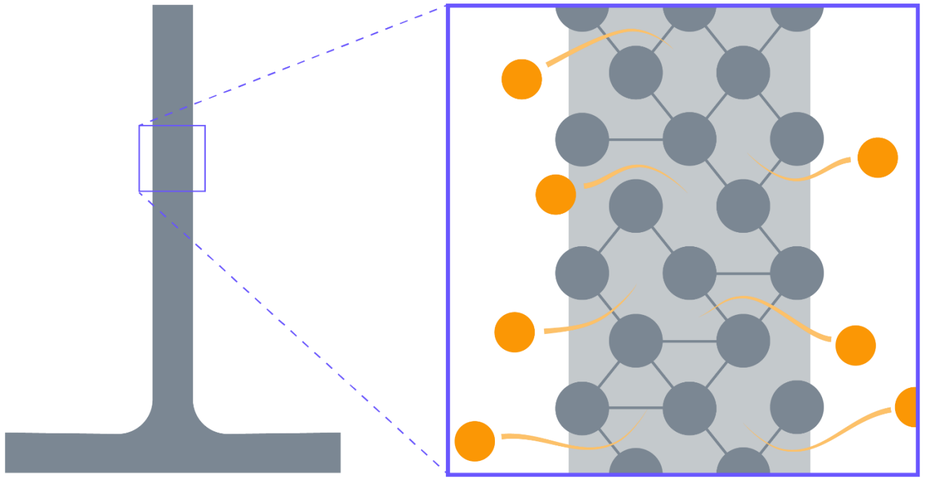

Small cross section = more shrinkage
Monomers are close to the part surface so they all escape, causing a large amount of mass loss and shrinkage.

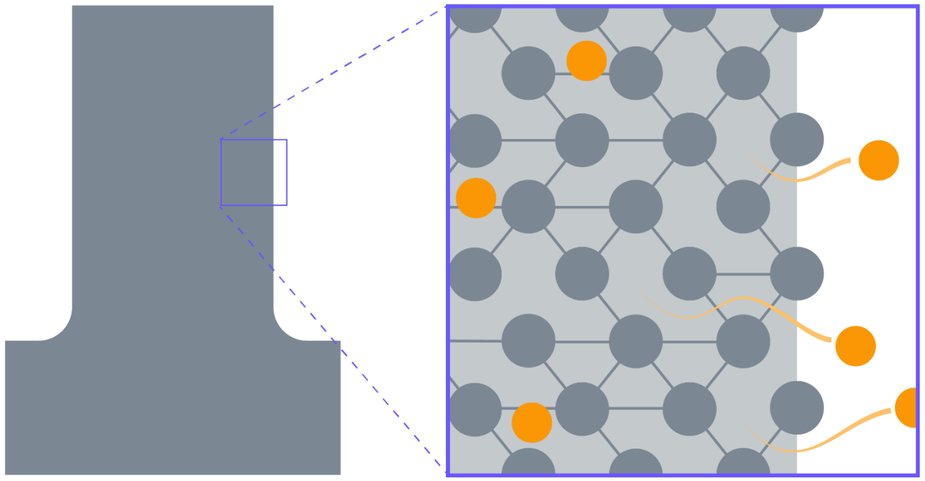

Large cross section = less shrinkage
Monomers close to surface escape. Monomers deep in part remain contained.

Shorten Overhangs

- To create self-supporting features
  - To prevent sagging
  - To eliminate need for supports
- To prevent deflection/ deformation

Large under-supported overhangs will deform.

Supports prevent sagging but increase resin usage and post processing time.

Shortened overhangs decrease resin usage and create accurate features.

Reduce Mass

- To eliminate unnecessary material and save cost
- To reduce heat generated in the print
  - Increase print times
  - Reduce risk of heat-related print defects

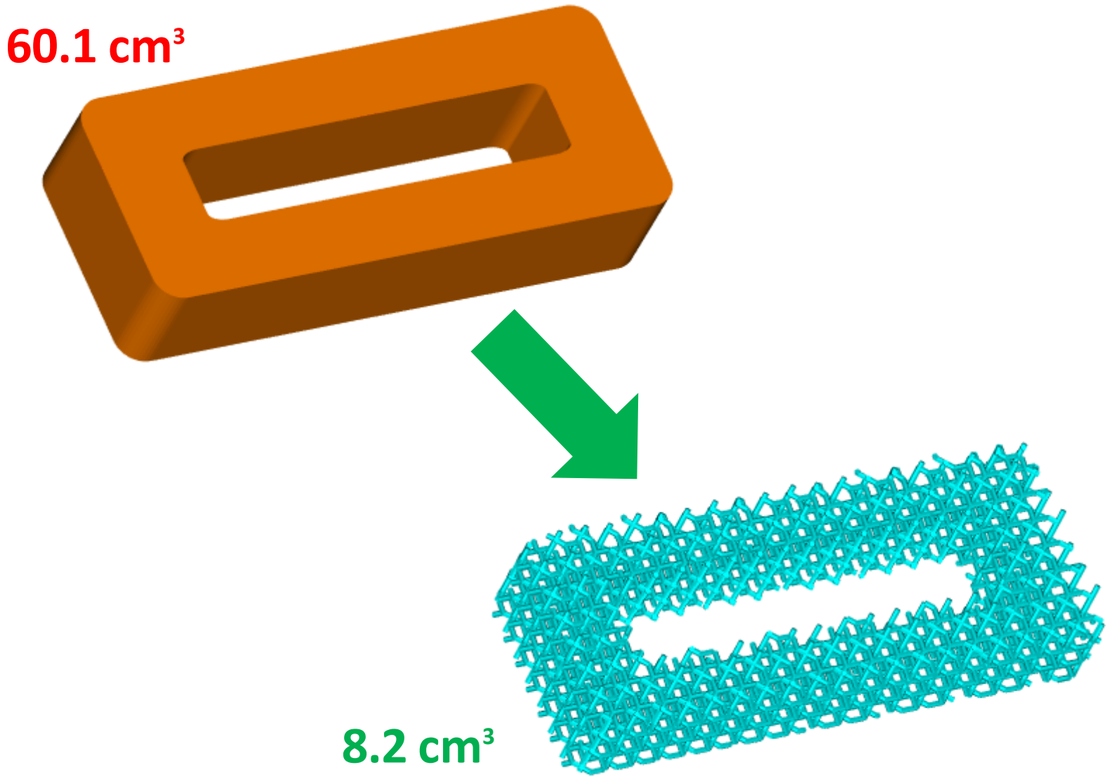

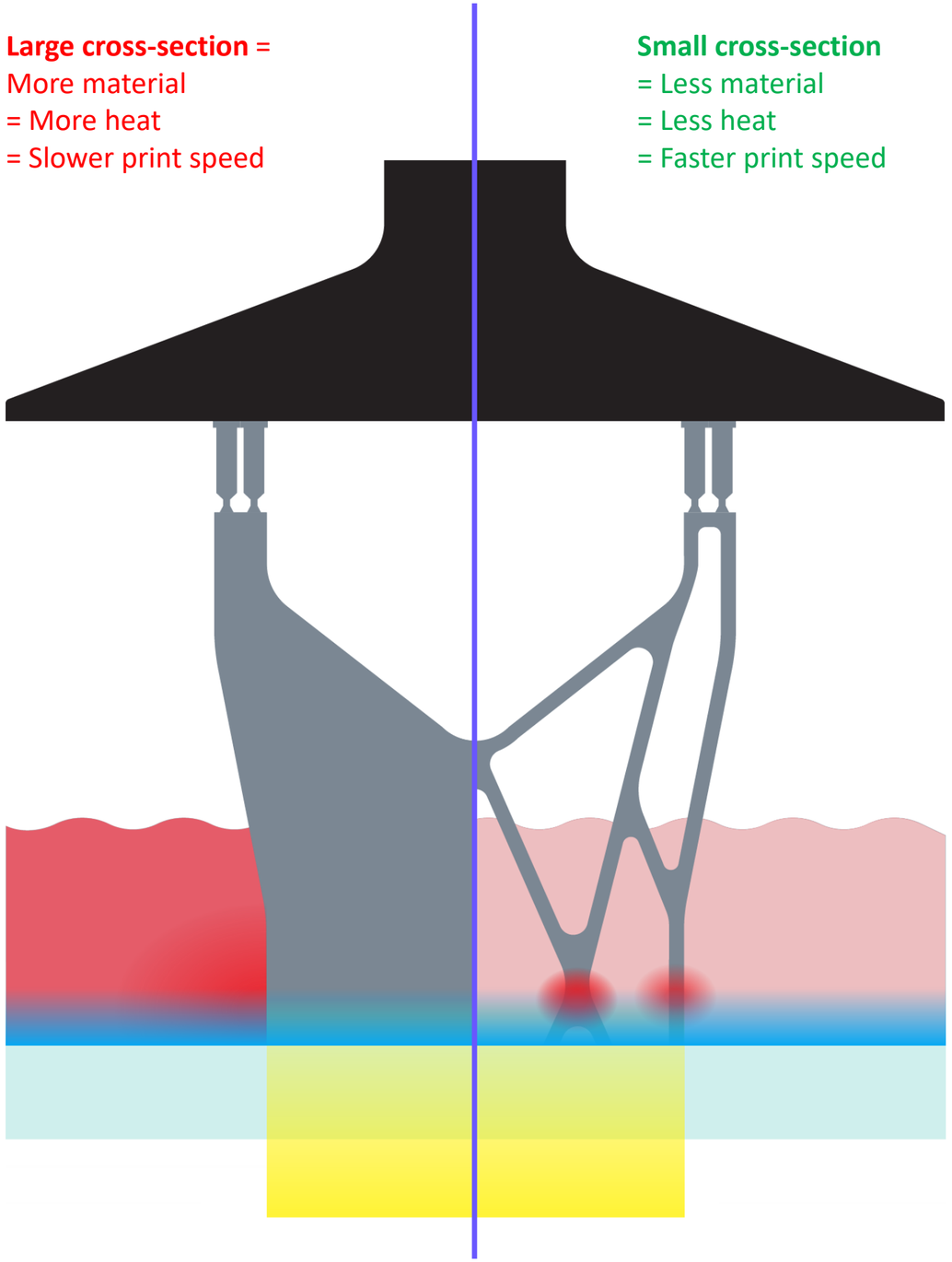

Modify Feature Geometry

- Work with material properties
  - Assess how brittle or soft the material is and accommodate the design to best serve the resin
- Assess post-processing characteristics
  - Washing
  - Curing
- Improve functional performance
- Part consolidation

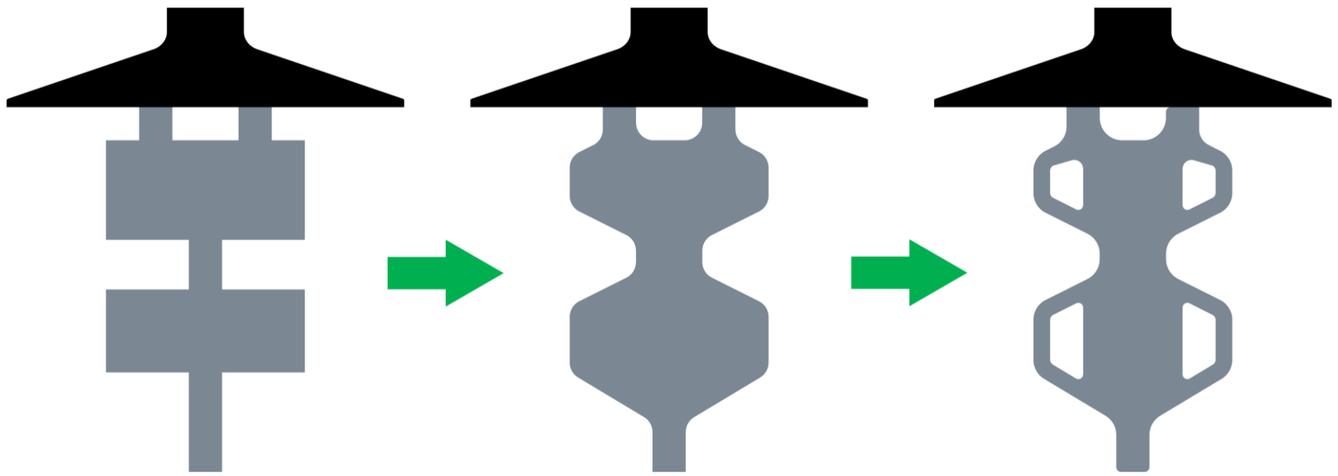

Optimizing geometry over three iterations

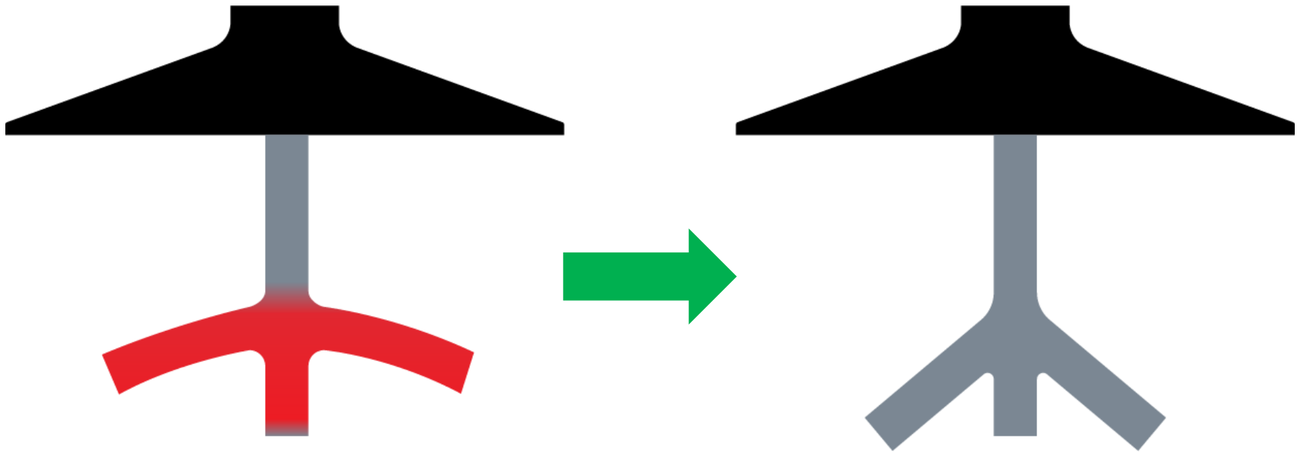

Overhang features angled to be self supporting

Application Assessment

DLS Technical and Economic Fit

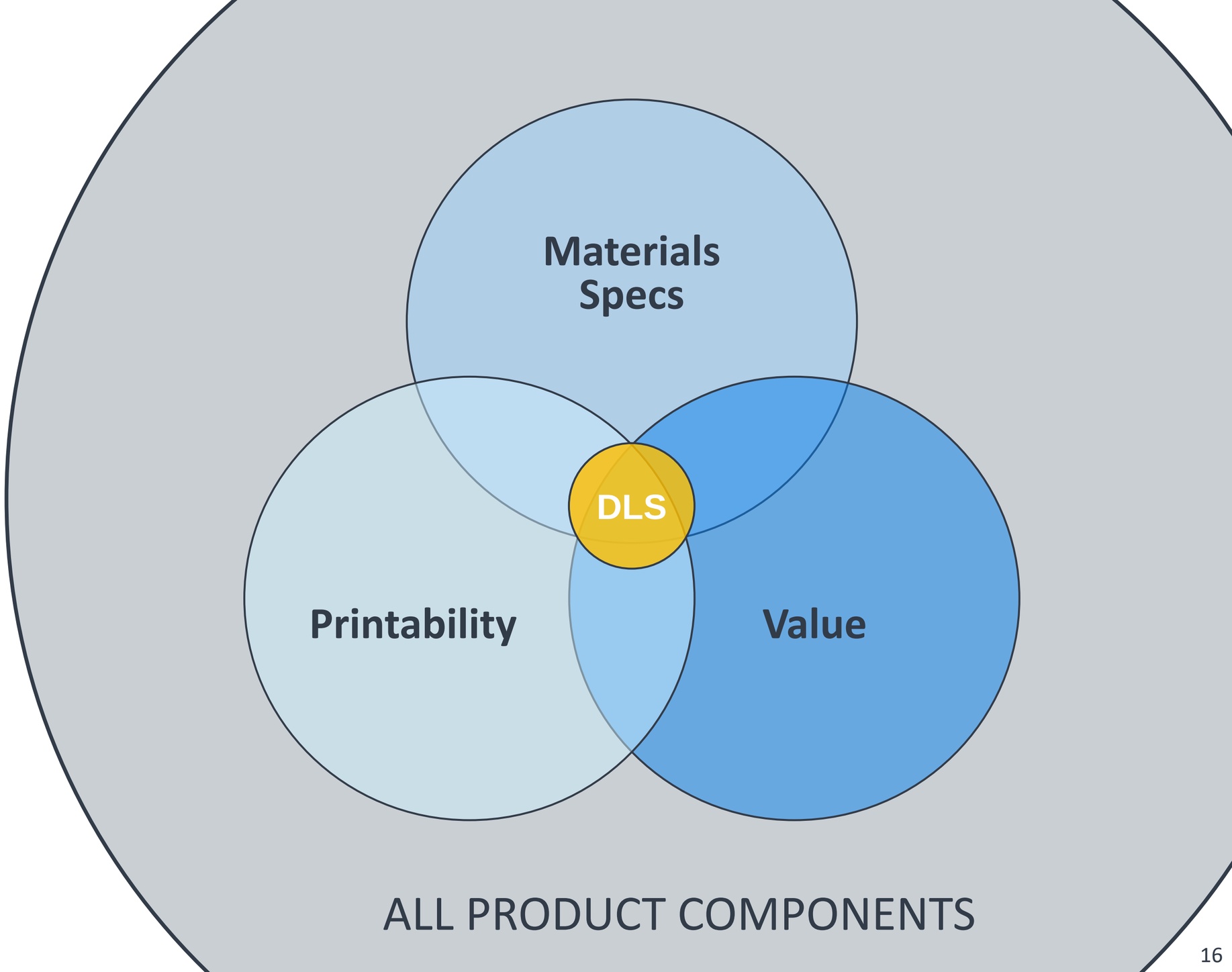

DLS Application Candidate

Evaluate application candidate against **Materials Specs**.

A connector is well-suited to the properties of epoxy (EPX):

- High stiffness while maintaining toughness
- Thermal and chemical resistance
- High resolution

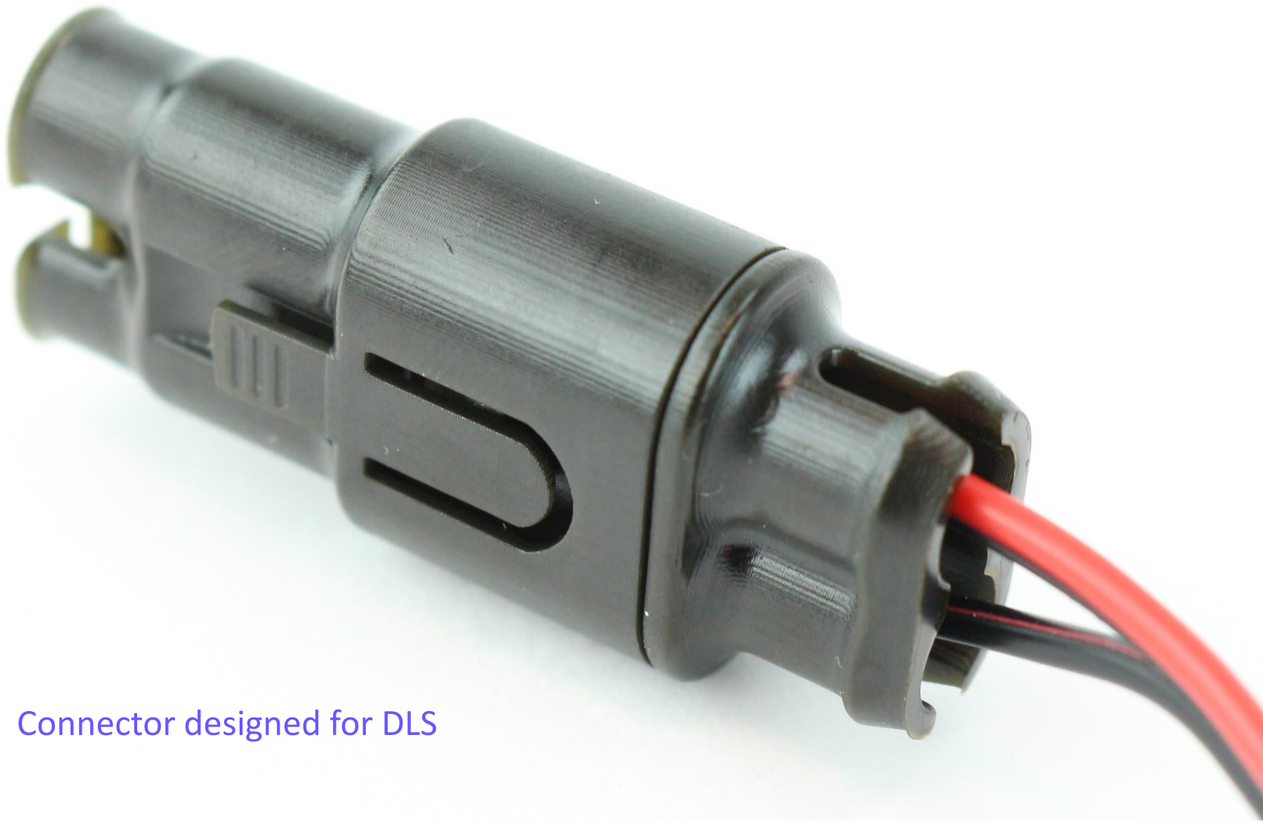

Connector designed for DLS

DLS Application Candidate

Evaluate application candidate as a **DLS Printability & Value** by identifying DLS strengths associated with the part(s).

DLS STRENGTHS

Part consolidation

Small parts

Textures

Lattices

Fine features

Cosmetic surfaces

Air and water up to 230°C

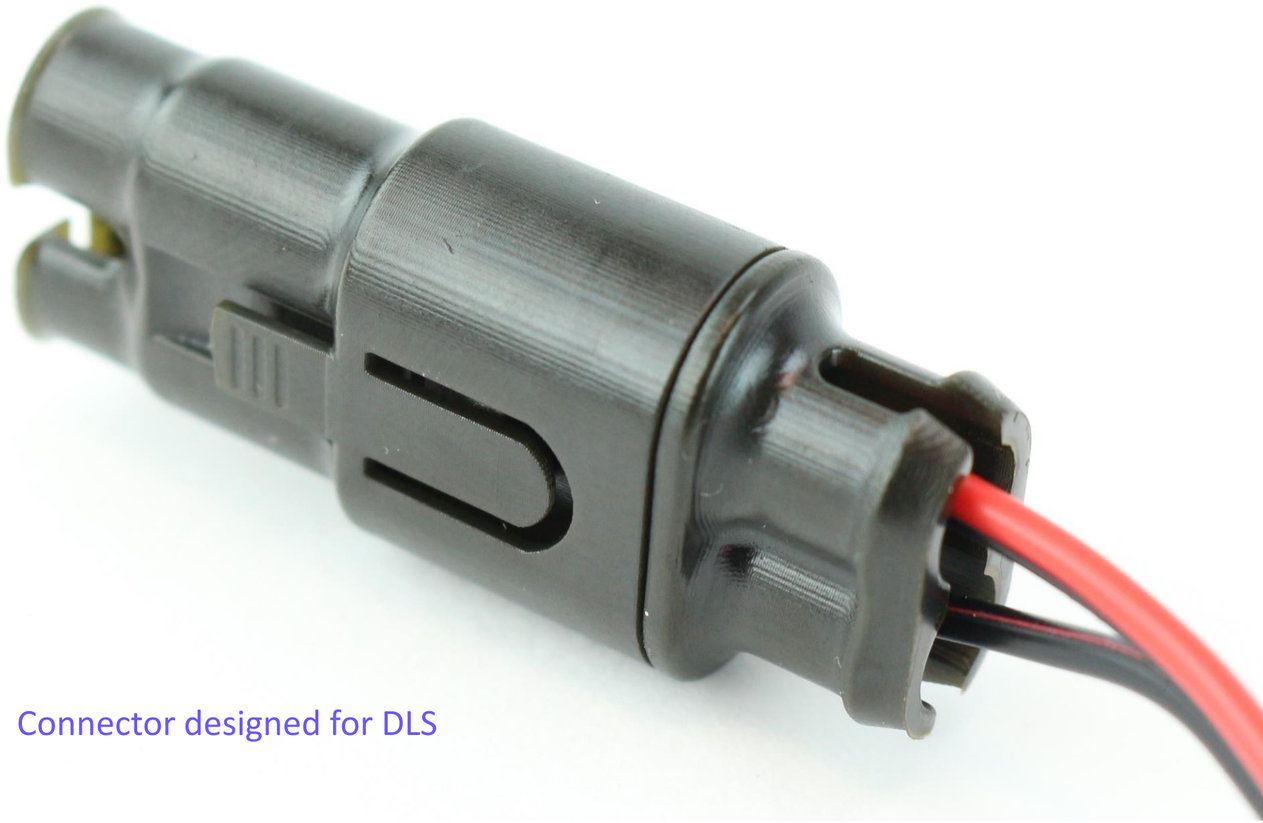

Connector designed for DLS

Connector Design Iterations

Original Design

The original design **(Fig. 1)** of this generic connector consists of:

- Male component with a large clip **(Fig. 2)**
- Female component **(Fig. 3)**

Design Considerations:

- For use in a **dry, high temperature environment** up to 100°C
- **Ergonomic** assembly, infrequent maintenance

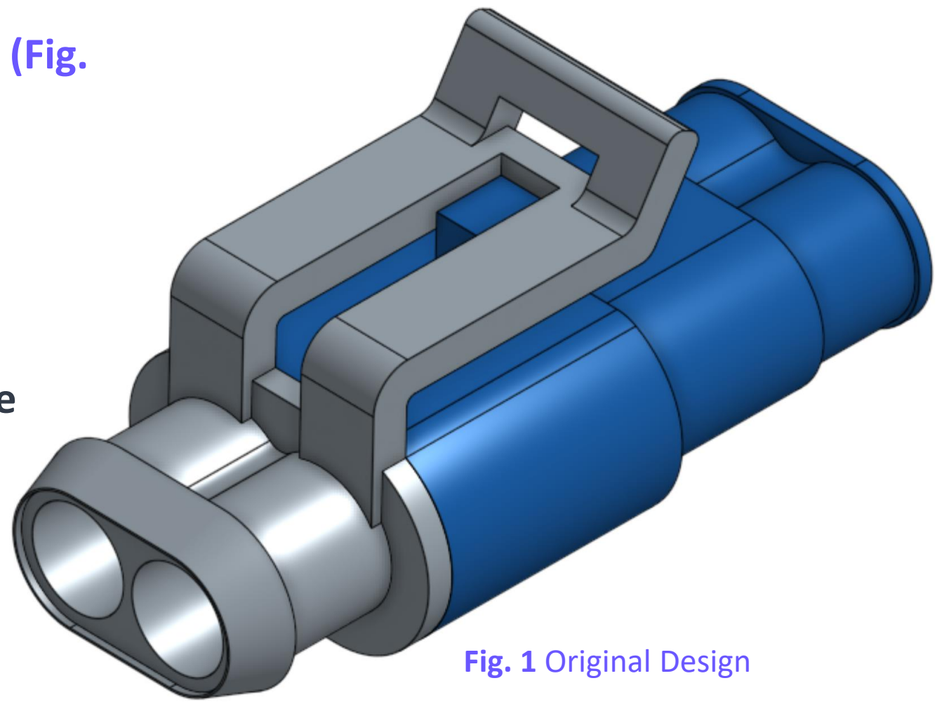

Fig. 1 Original Design

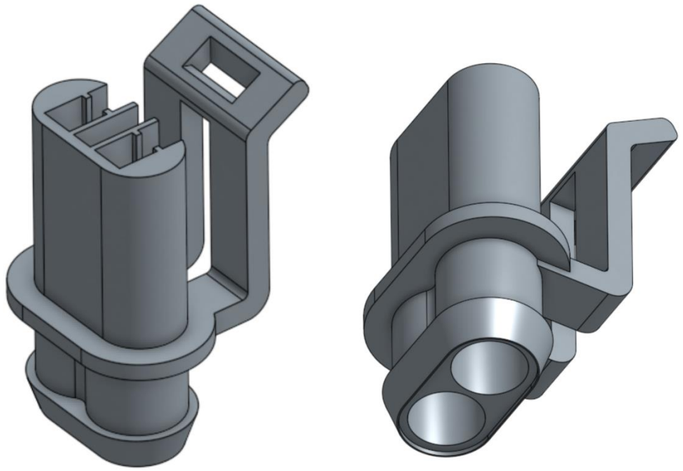

Fig. 2 Male Component

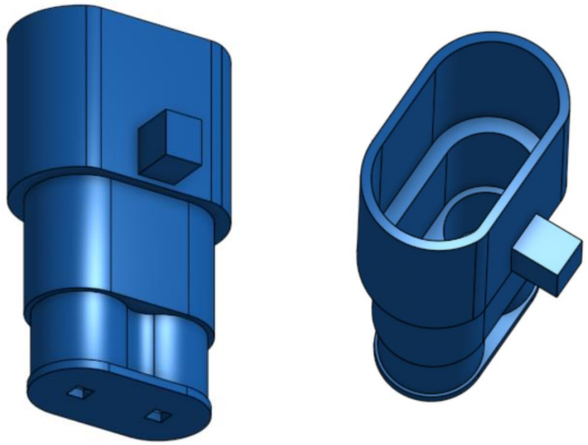

Fig. 3 Female Component

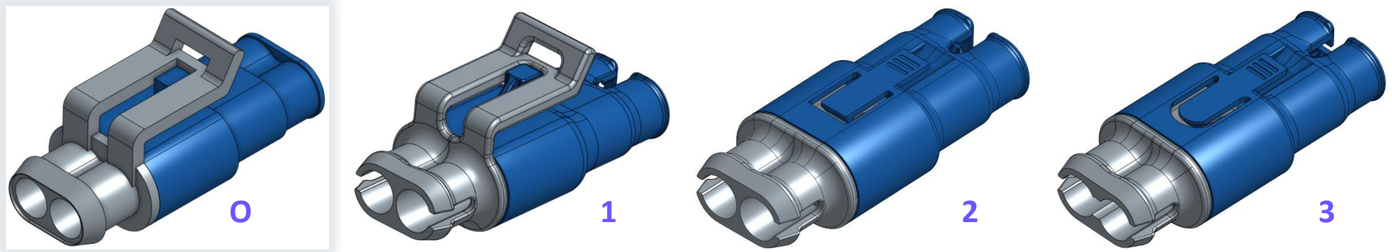

Iteration 1

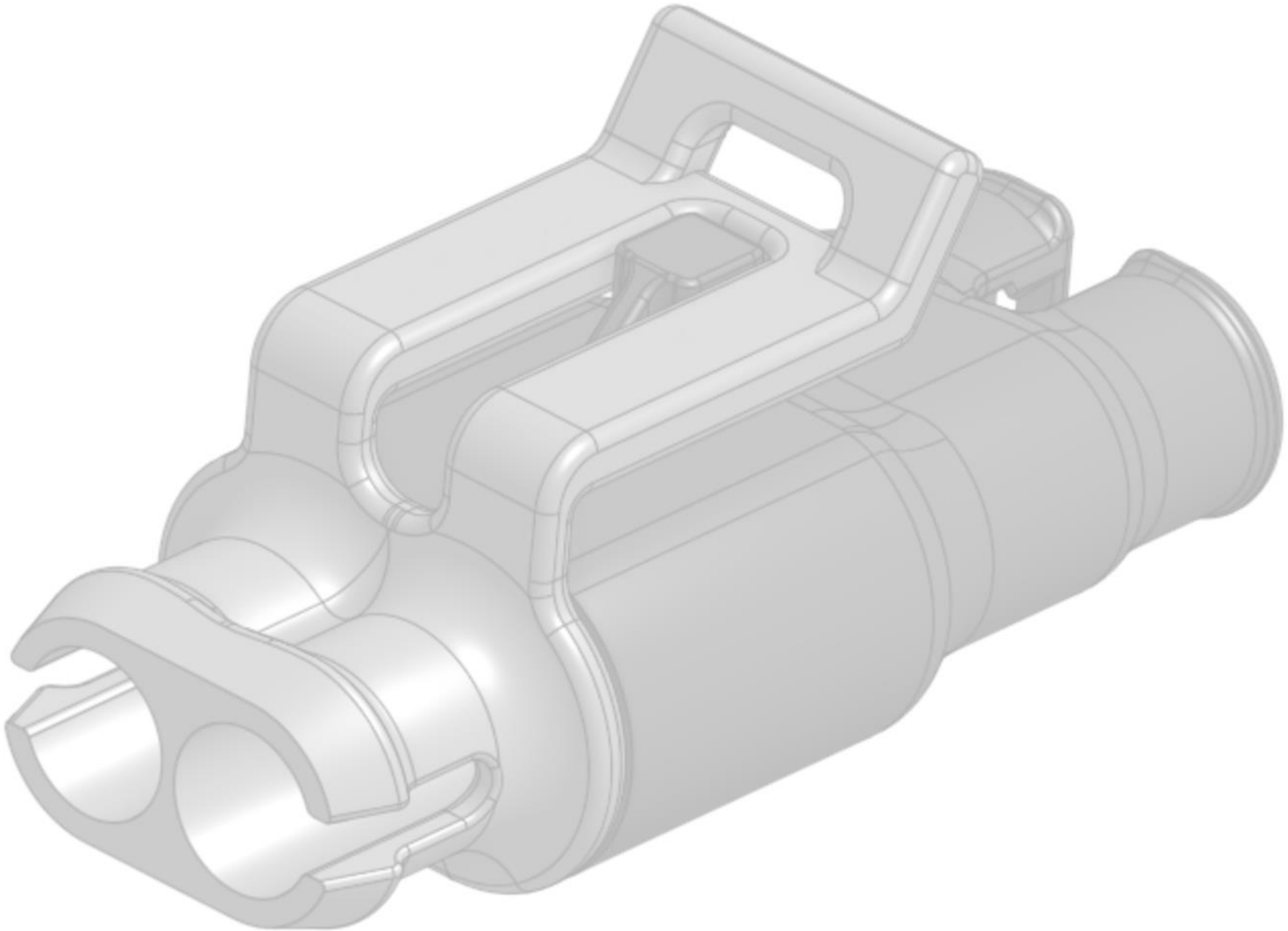

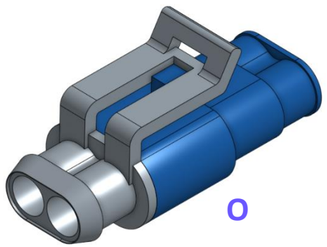

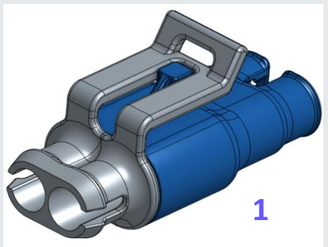

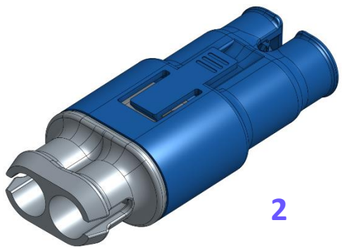

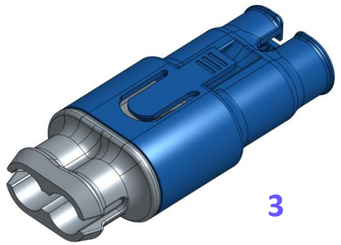

Vent Holes

Holes on the platform end of the parts provide venting during printing to prevent print failures and defects from unvented volumes.

- Carbon software provides warnings of unvented volumes. **(Fig. 1)**
- Fringing example from wall instability is evident on the female component of the original design. **(Fig. 2)**

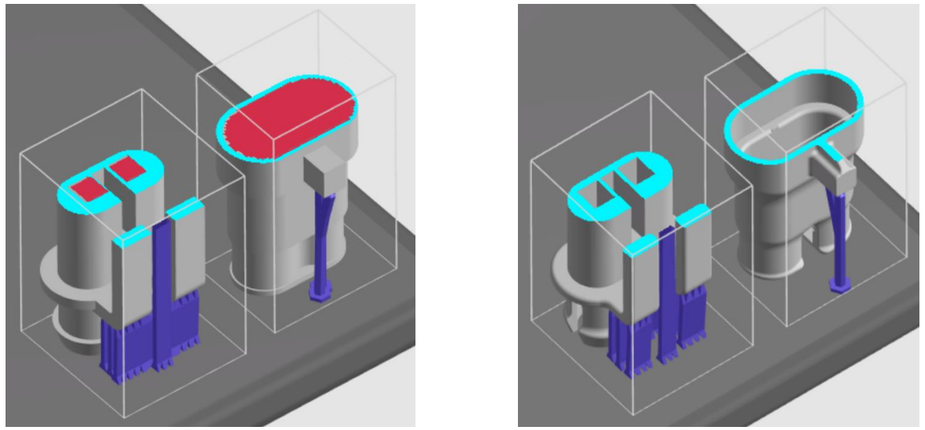

Original Design - unvented Iteration 1 - vented

Fig. 1 Unvented volumes highlighted in red in Carbon software

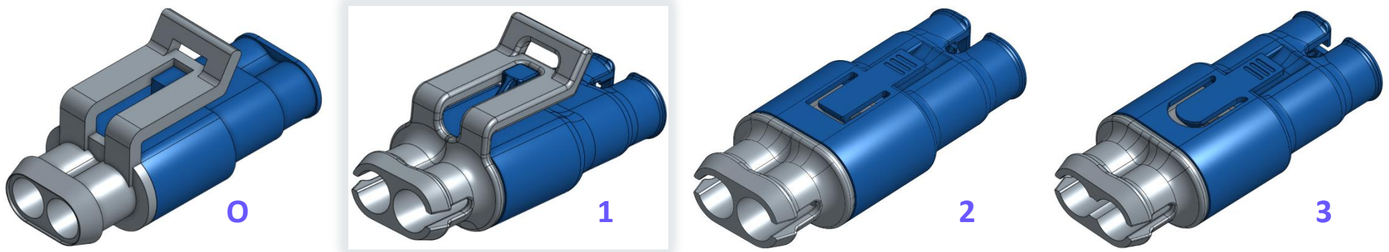

Fig. 2 Original Design

Fig. 3 Iteration 1

Drain Holes

Holes on the platform end of the parts also offer drainage to improve the removal of liquid resin during washing.

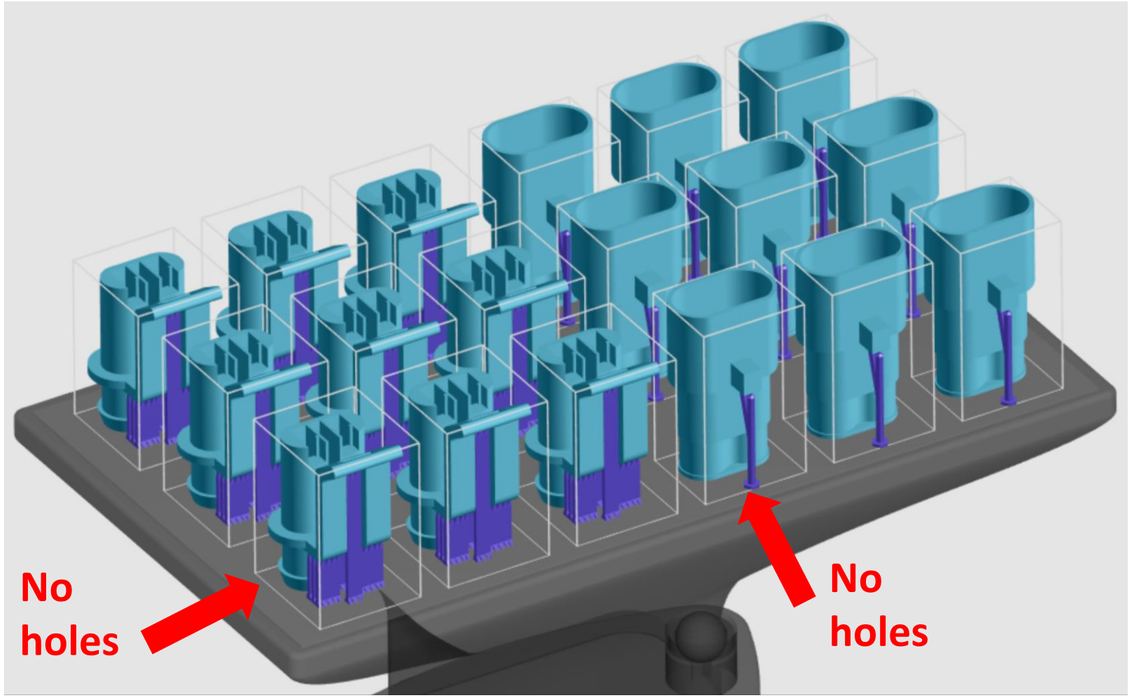

Fig. 1 Original Design - No holes at the platform

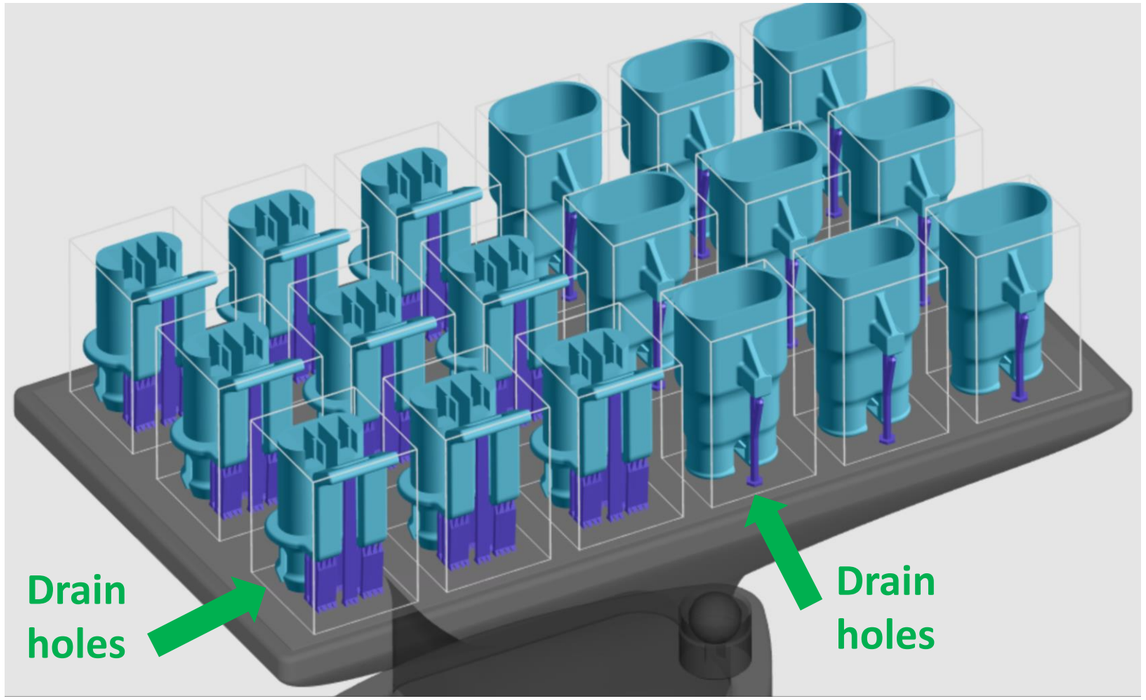

Fig 2. Iteration 1 - Drain holes at the platform

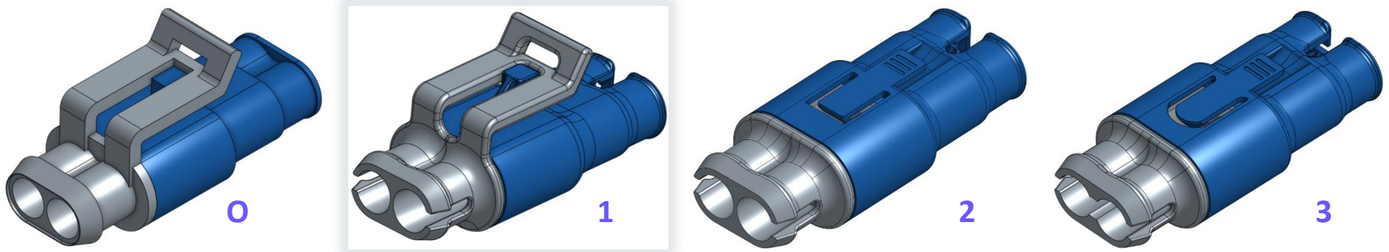

Increase Thickness

Increasing the thickness of the clip provides more strength and reduces the chance of warping to preserve feature accuracy.

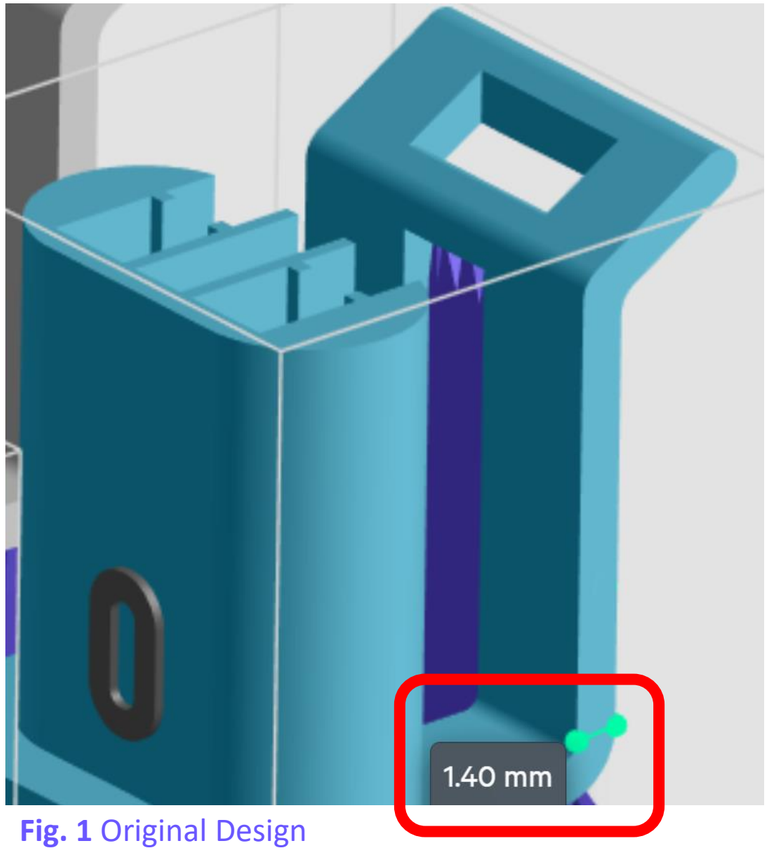

Fig. 1 Original Design

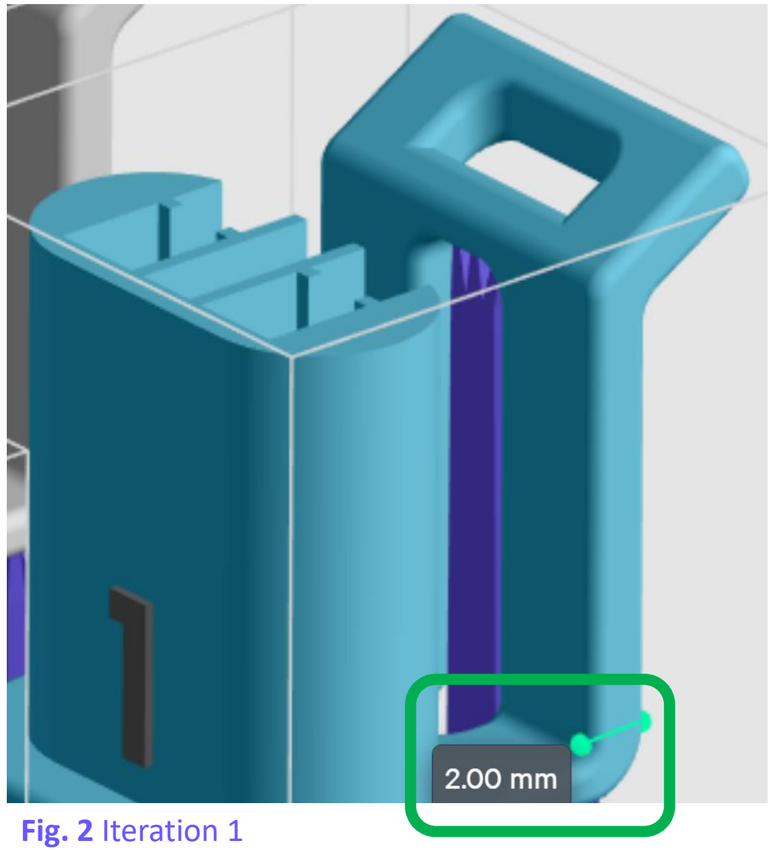

Fig. 2 Iteration 1

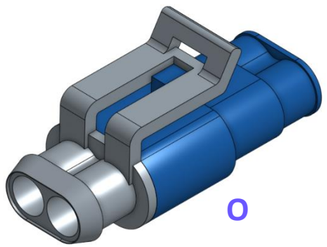

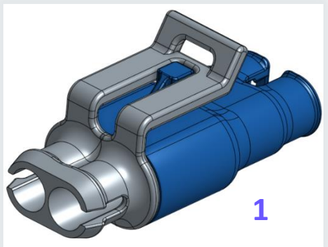

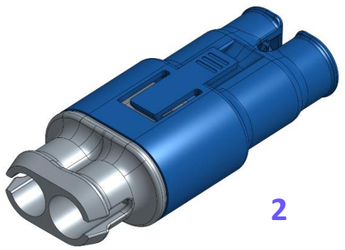

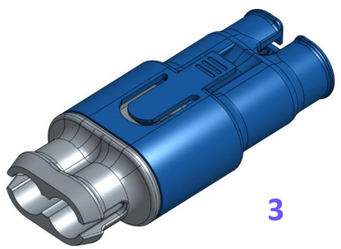

Fillets

Fillets on the corners and edges of the clip provide stress relief to prevent cracking.

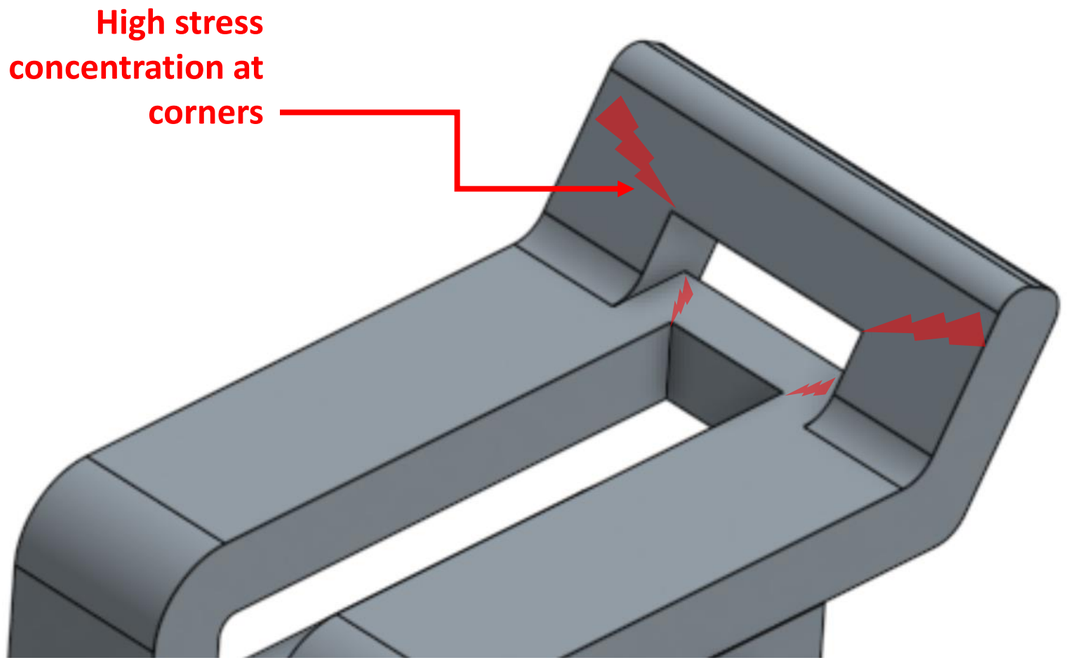

Fig. 1 Original Design

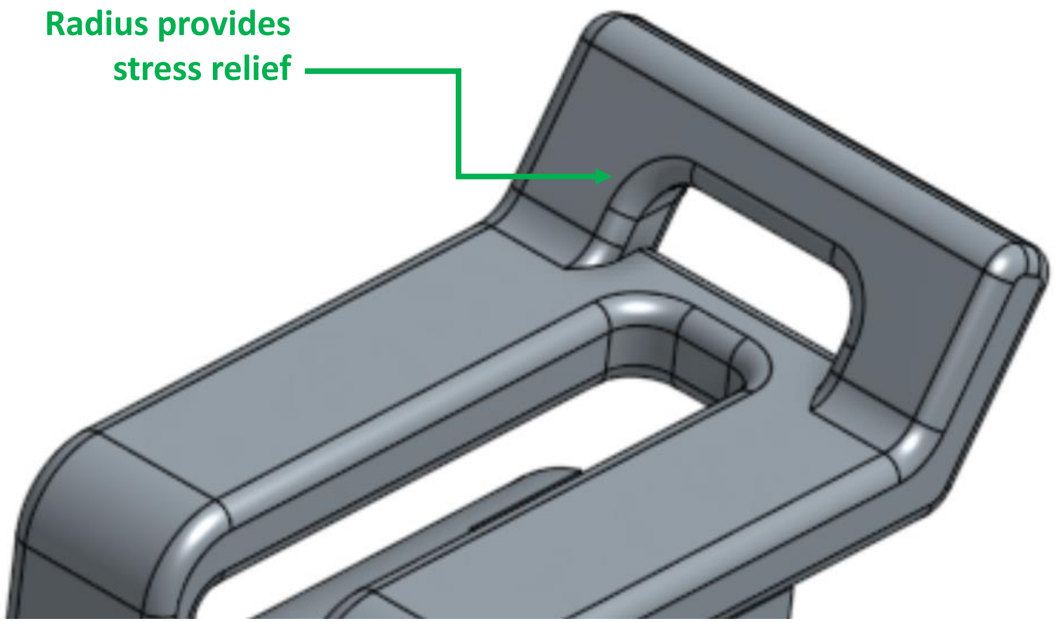

Fig. 2 Iteration 1

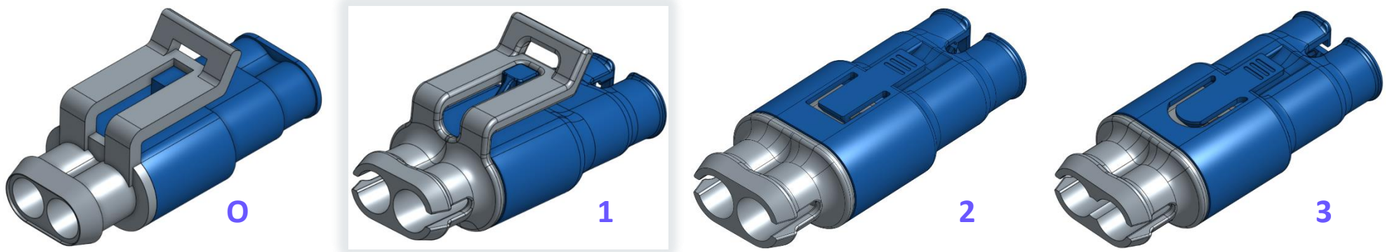

Fillets

Fillets on the ledges in the build direction provide a gradual cross section change to increase printability and accuracy.

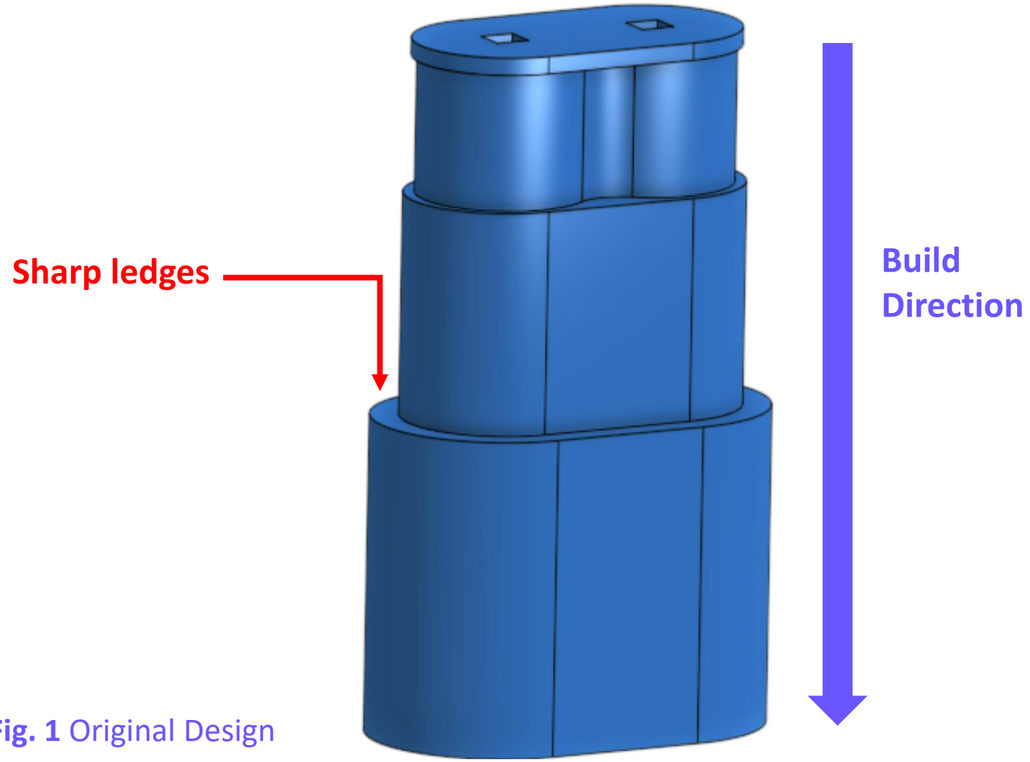

Fig. 1 Original Design

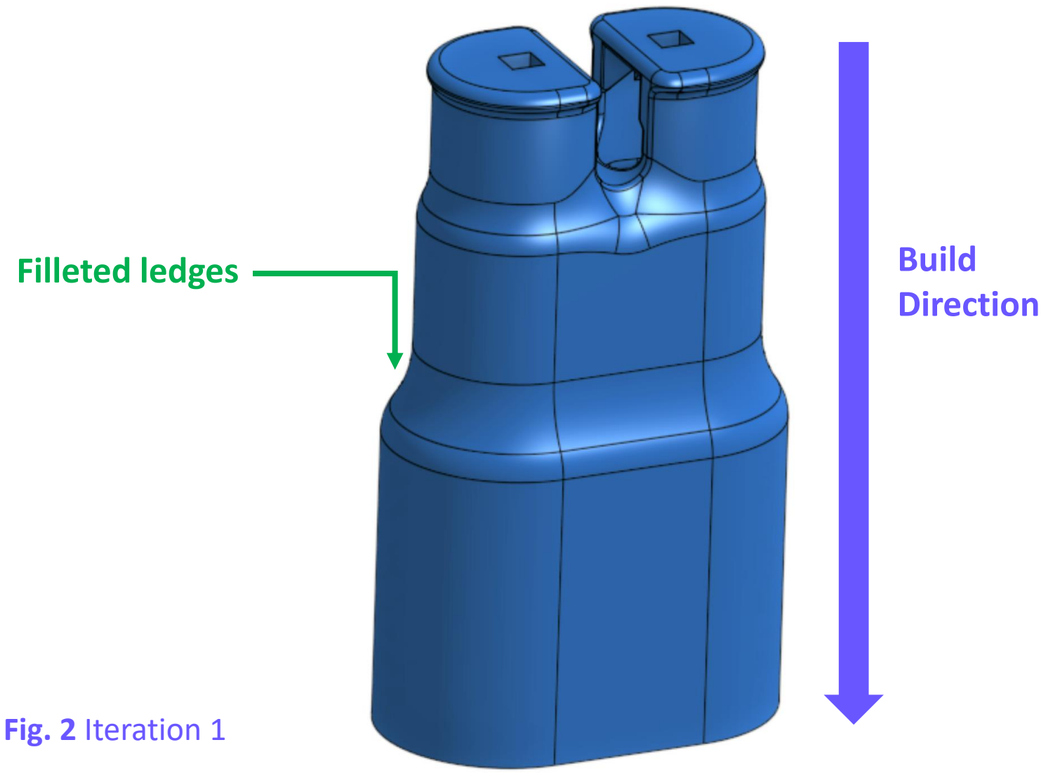

Fig. 2 Iteration 1

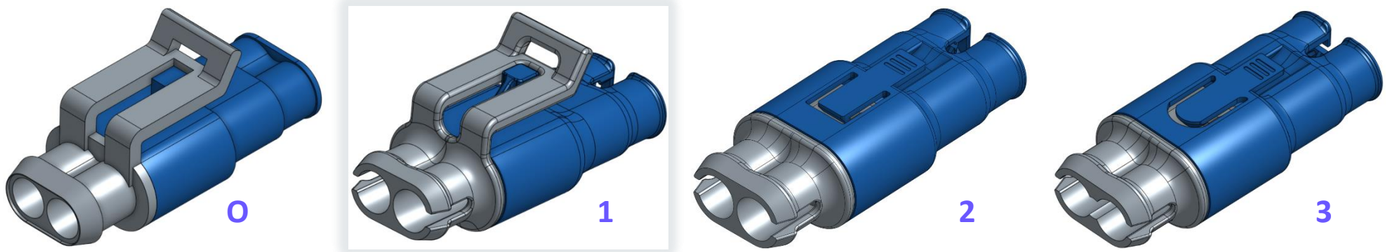

Gussets

The gusset on the clip catch feature provide a gradual cross section change to increase stability during printing.

Functionally, the gusset helps guide the clip into place. *(Gussets can also be useful to create self-supporting features.)*

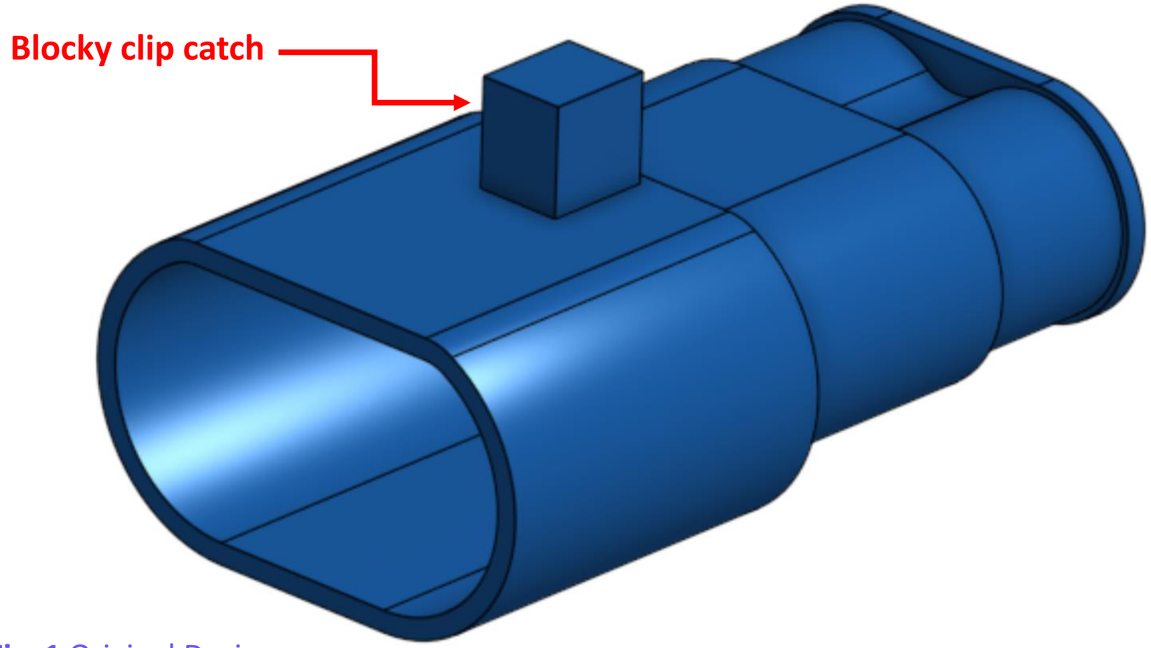

Fig. 1 Original Design

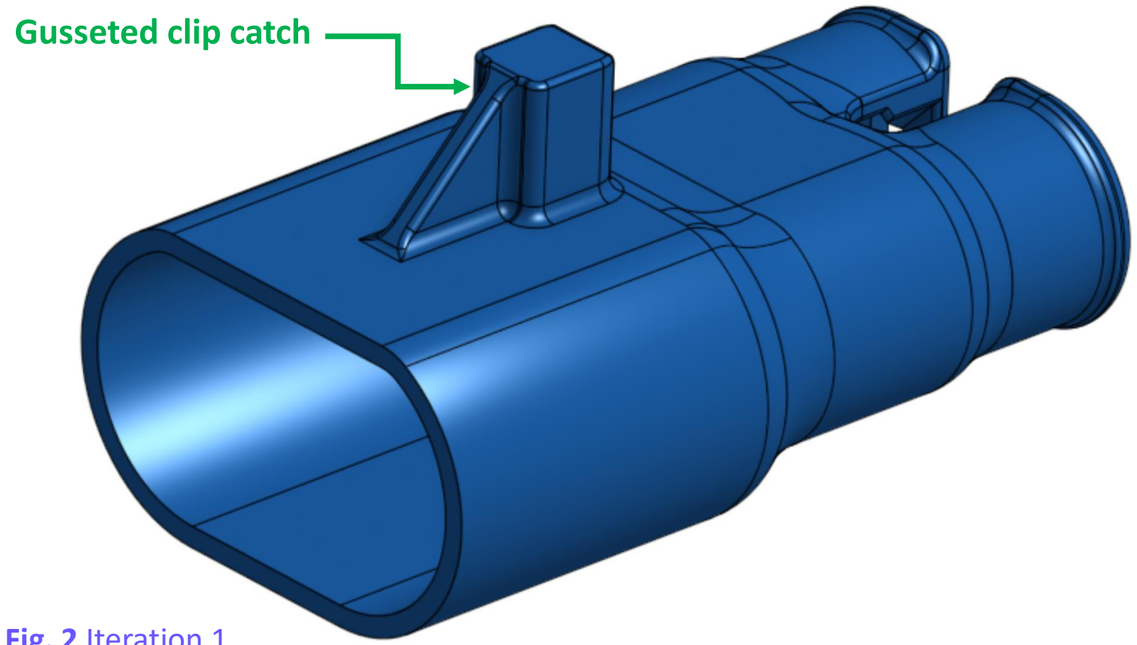

Fig. 2 Iteration 1

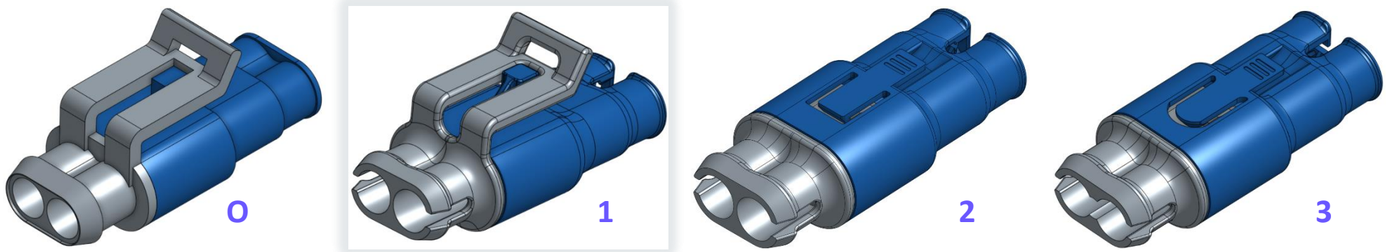

Analyze Iteration 1

What can we gain with further iteration?

- Improve function
  - Engaging the two components is difficult.
  - Clip doesn't work well with brittle material which is prone to breaking.
- Improve processing
  - Reduce supports and spend less time removing them.
  - Improve part stability (ie, clip makes the part unstable to stand on its own, which makes baking difficult).

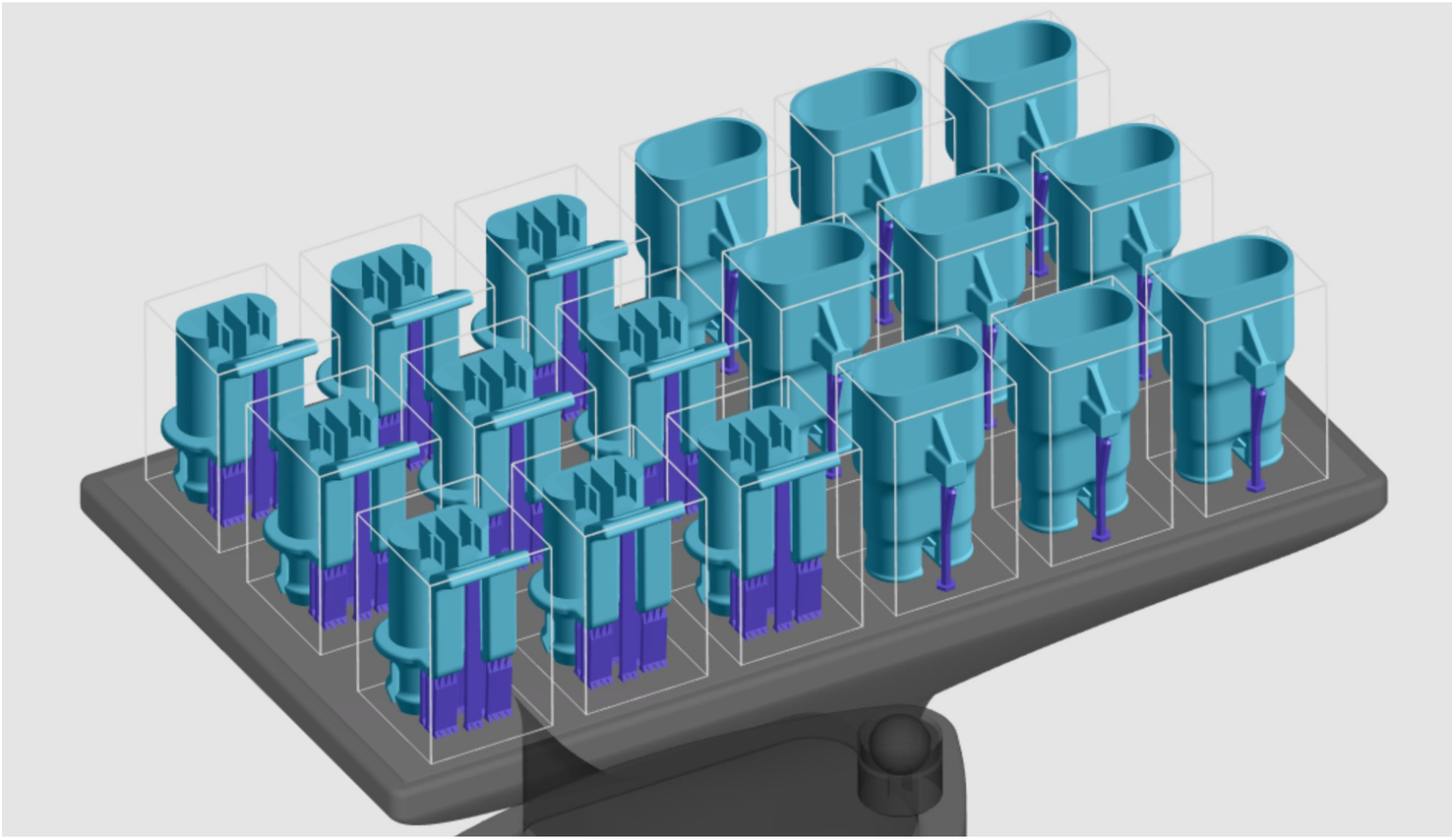

Fig. 1 Iteration 1

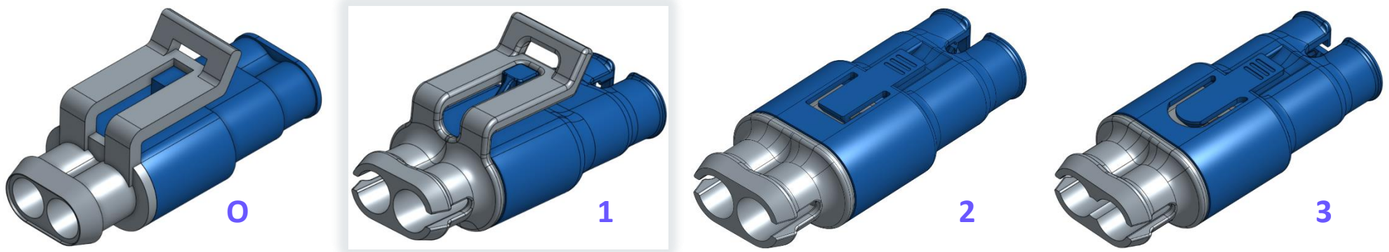

Iteration 2

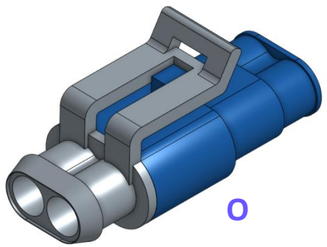

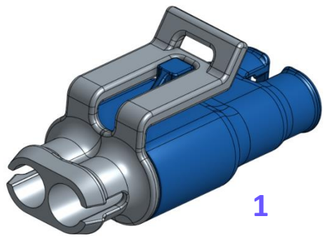

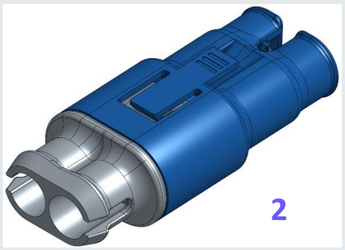

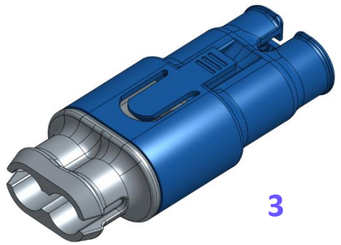

Modify Feature Geometry

The clip can be redesigned to reduce chance of breaking during use.

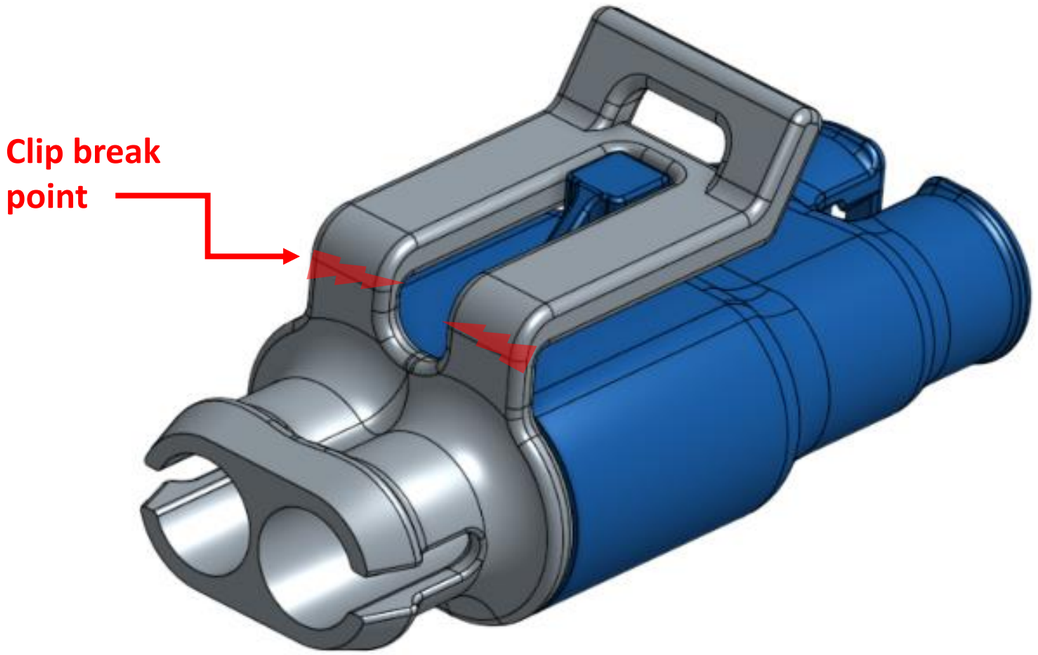

Fig. 1 Iteration 1

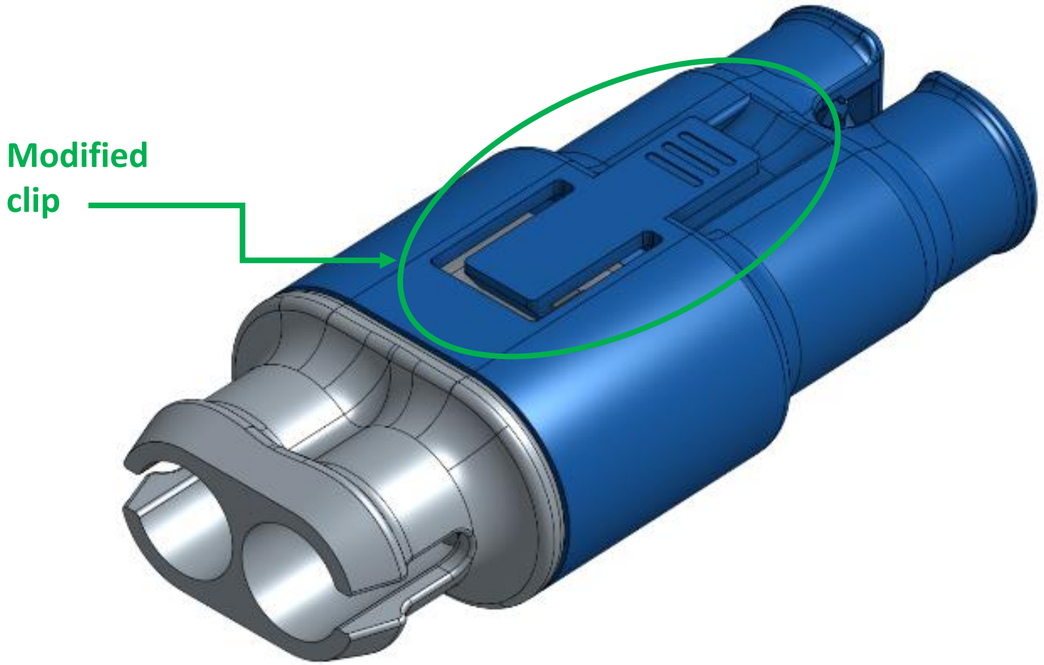

Fig. 2 Iteration 2

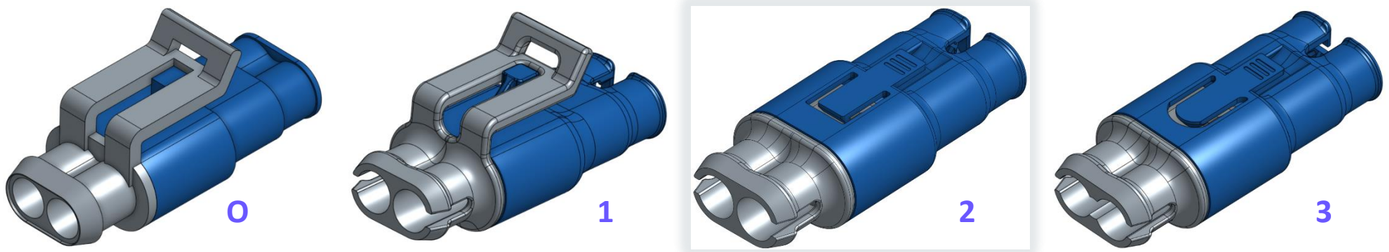

Reduce Mass

Changing the clip design also provides benefits of mass reduction.

- Provides volume reduction, 12% less material usage, reducing cost and print time
- Layout improvement with smaller footprint *(more parts per build)* **(Fig. 1)**
- More stability in printing and baking with centralized center of mass **(Fig. 2)**
- Reduces number of supports required **(Fig. 3)**
- Reduces risk of heat-related print defects

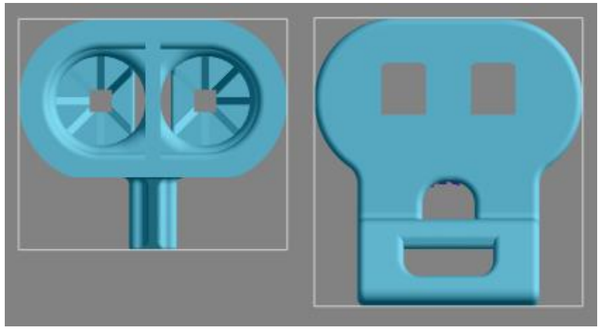

Iteration 1 – larger footprint

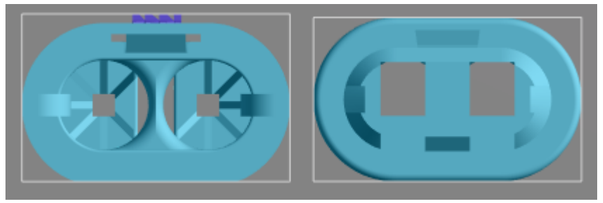

Iteration 2 – smaller footprint

Fig 1 Footprint

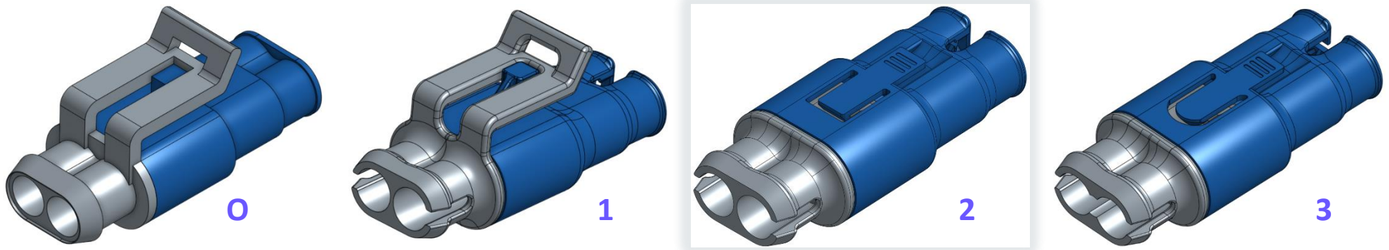

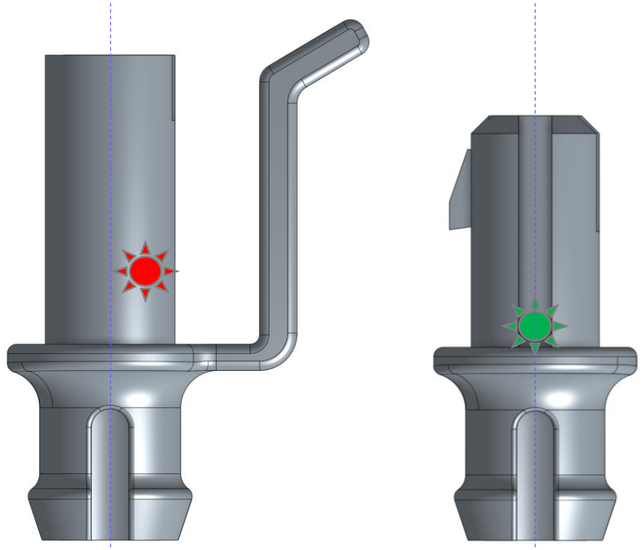

Iteration 1 Iteration 2

Fig. 2 Stability

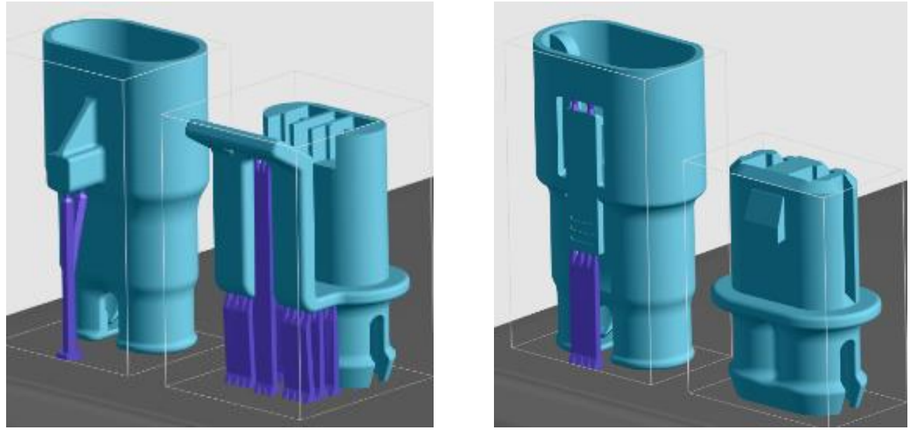

Iteration 1 Iteration 2

Fig. 3 Reduce Supports *(support structure shown in purple)*

Shorten Overhangs

The modified clip design allows for a smaller clip catch feature, with a shortened overhang. The modified clip catch is self-supporting, thus eliminating the need for supports.

- In Iteration 1, the clip catch on the female component required a large protrusion to meet the clip. **(Fig. 1)**
- In Iteration 2, the clip catch on the male component requires a smaller projection. **(Fig. 2)**

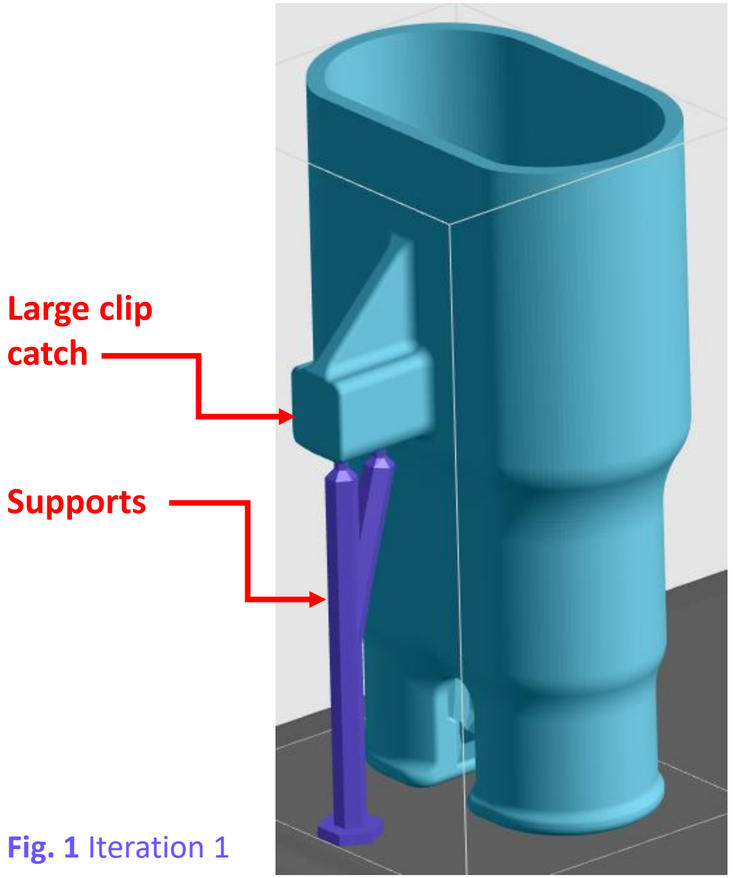

Fig. 1 Iteration 1

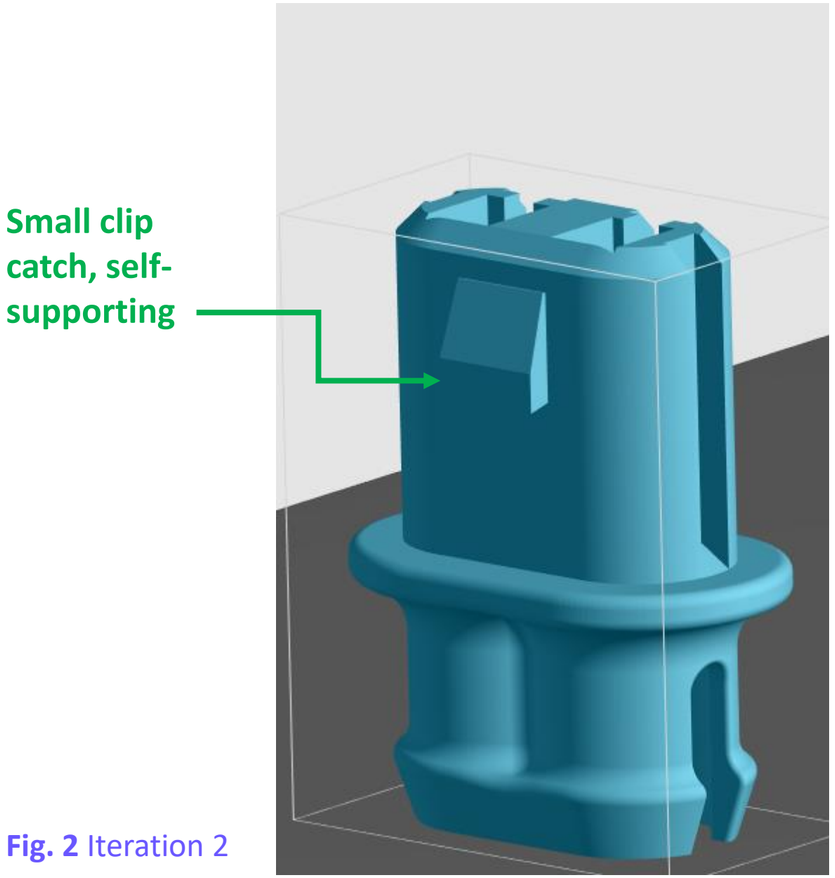

Fig. 2 Iteration 2

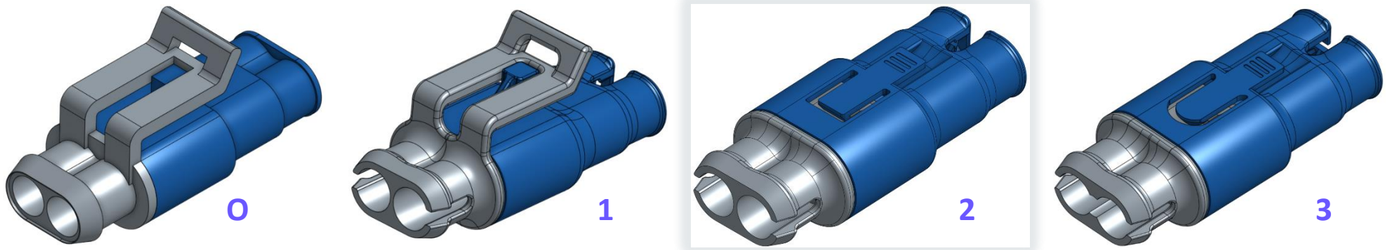

Modify Feature Geometry

Guides can be added to make engagement easier, and the fit smoother between the male and female components.

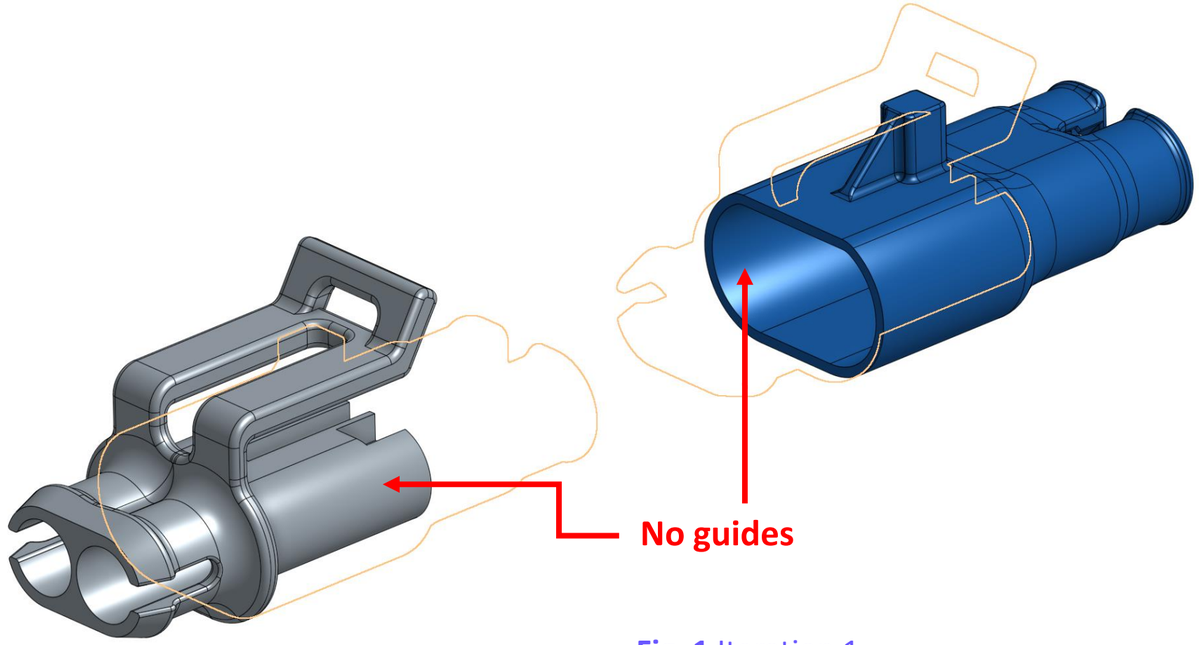

Fig. 1 Iteration 1

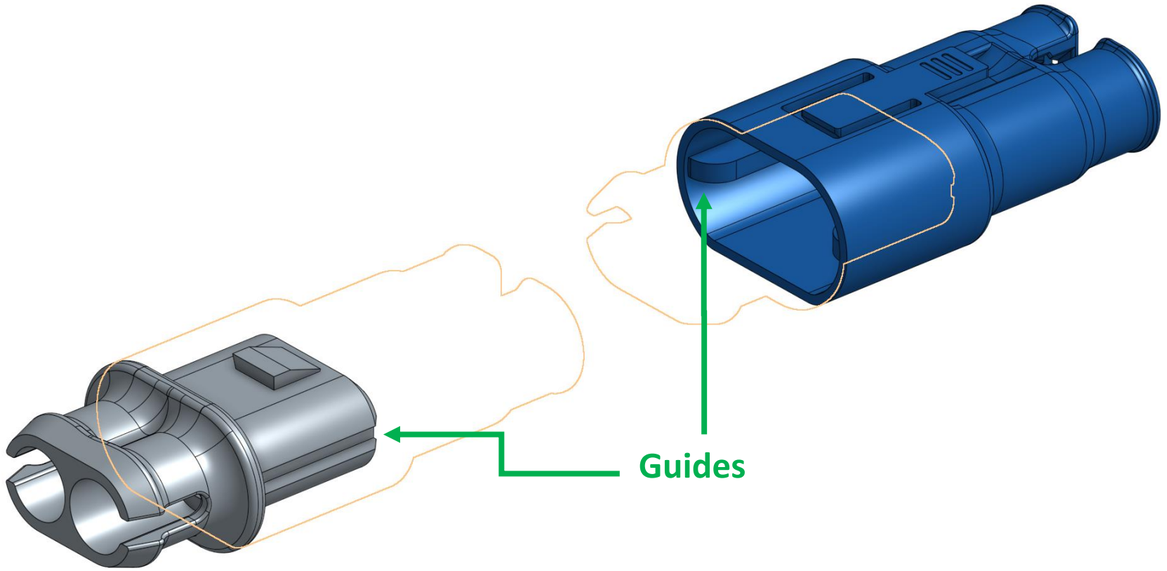

Fig 2. Iteration 2

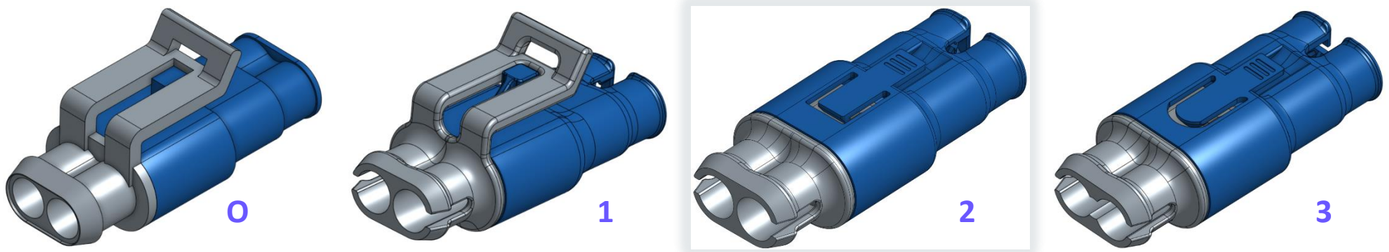

Analyze Iteration 2

What can we gain with further iteration?

- Improve function
  - Refine clip design for smoother engagement
- Improve processing
  - Improve drainage
  - Reduce supports
- Iterate for tolerance to meet accuracy requirements

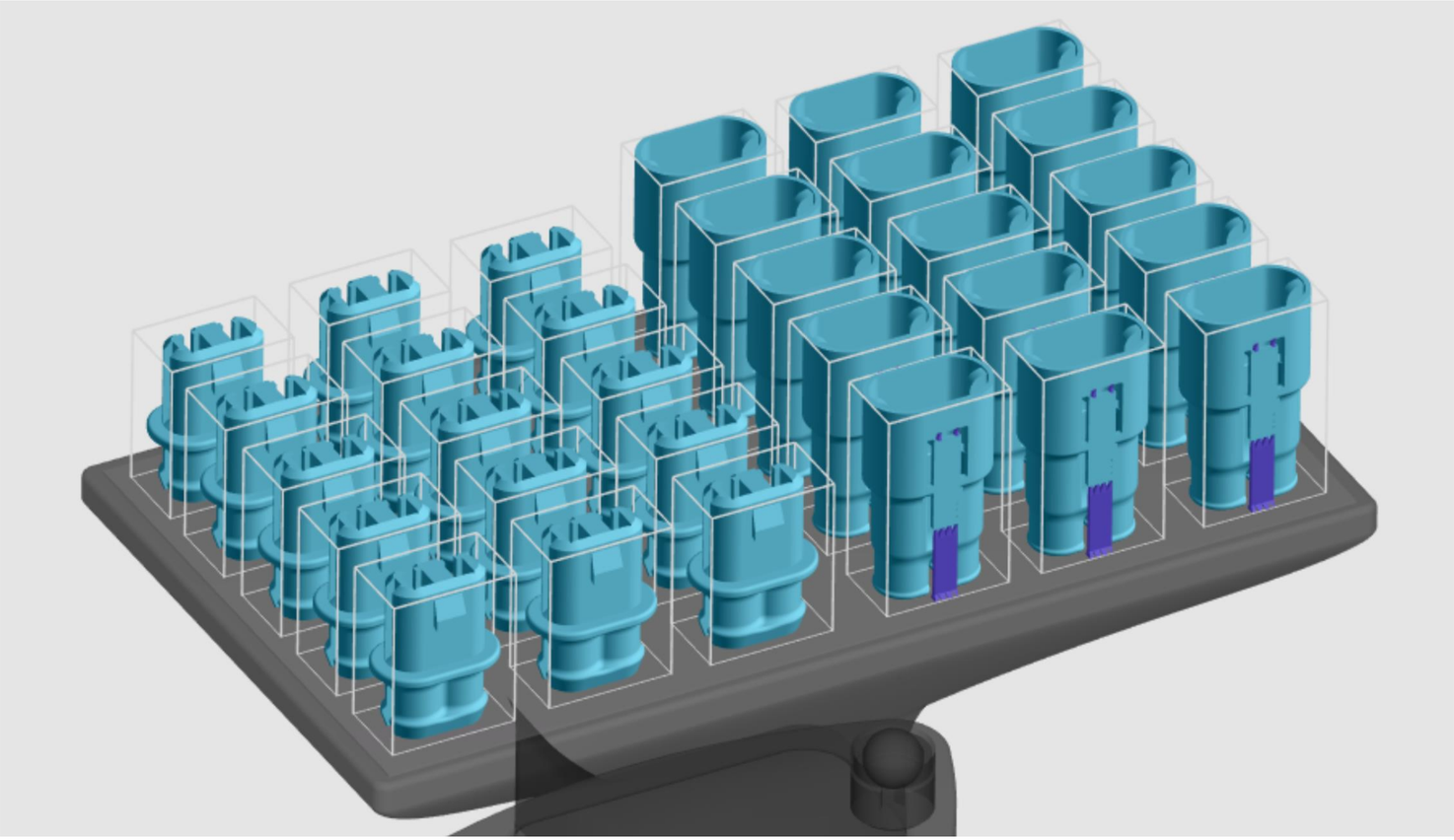

Fig. 1 Iteration 2

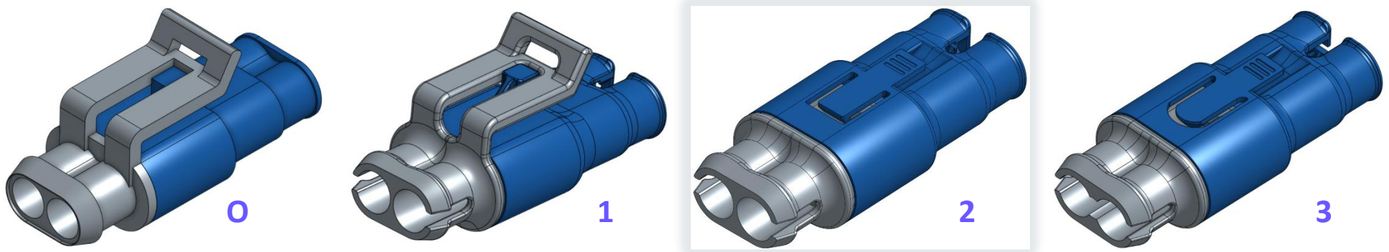

Iteration 3

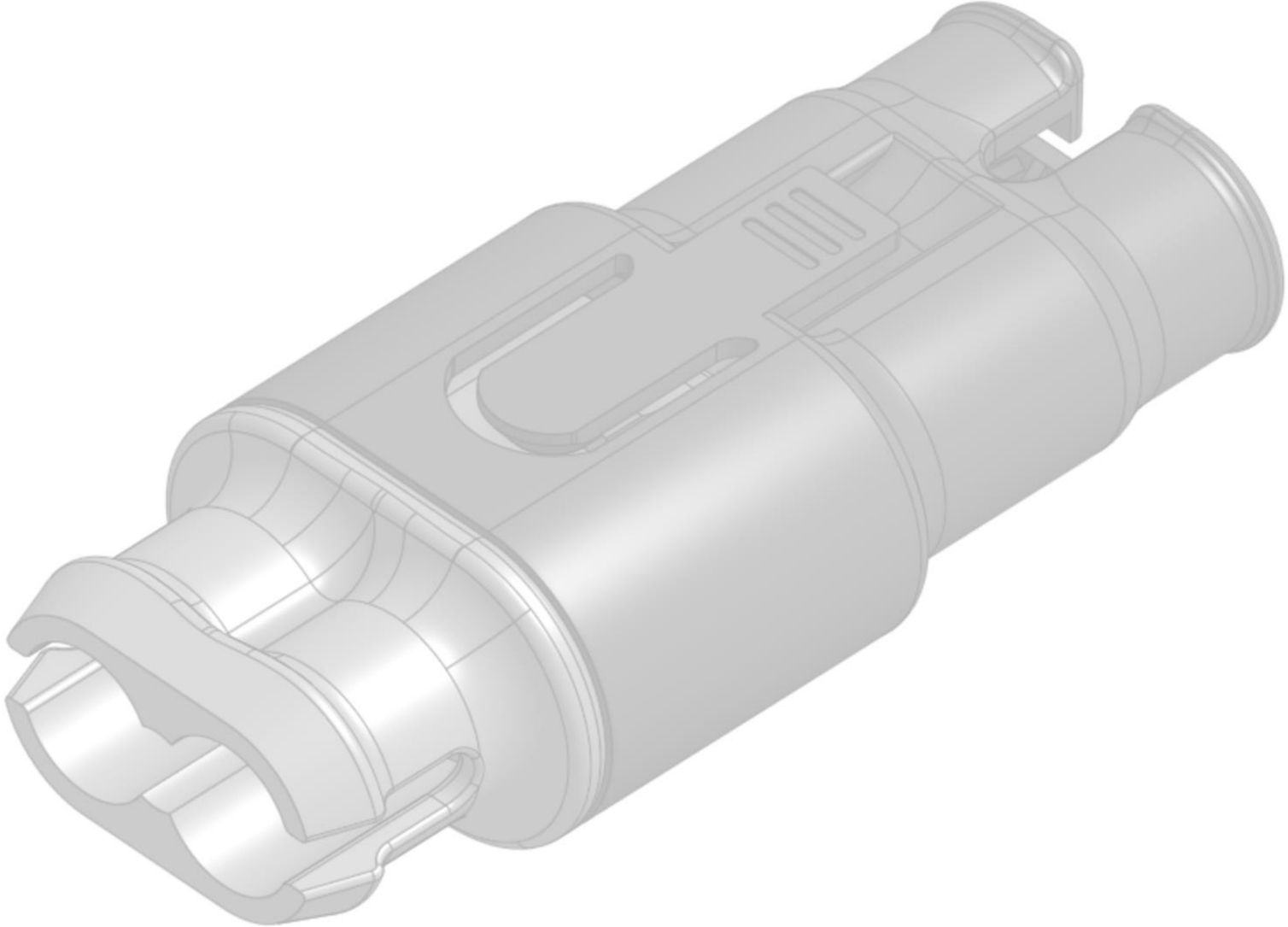

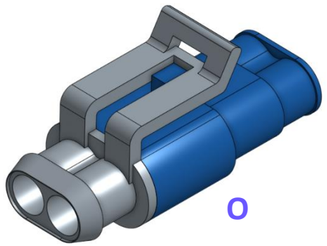

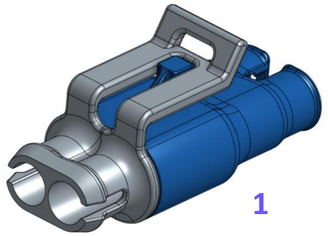

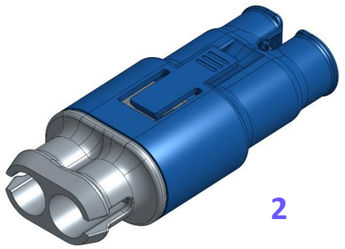

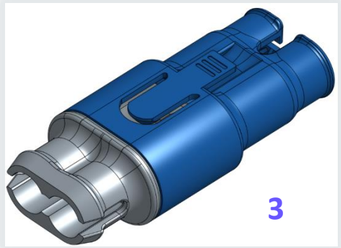

Fillets

Adding fillets to the end of the clip, rounding out the shape, makes the feature self-supporting.

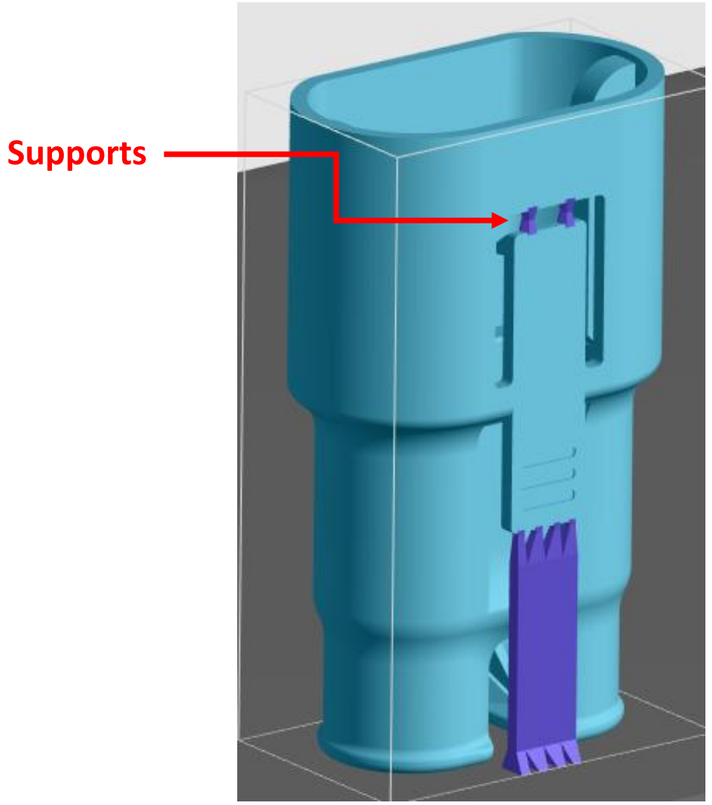

Fig. 1 Iteration 2

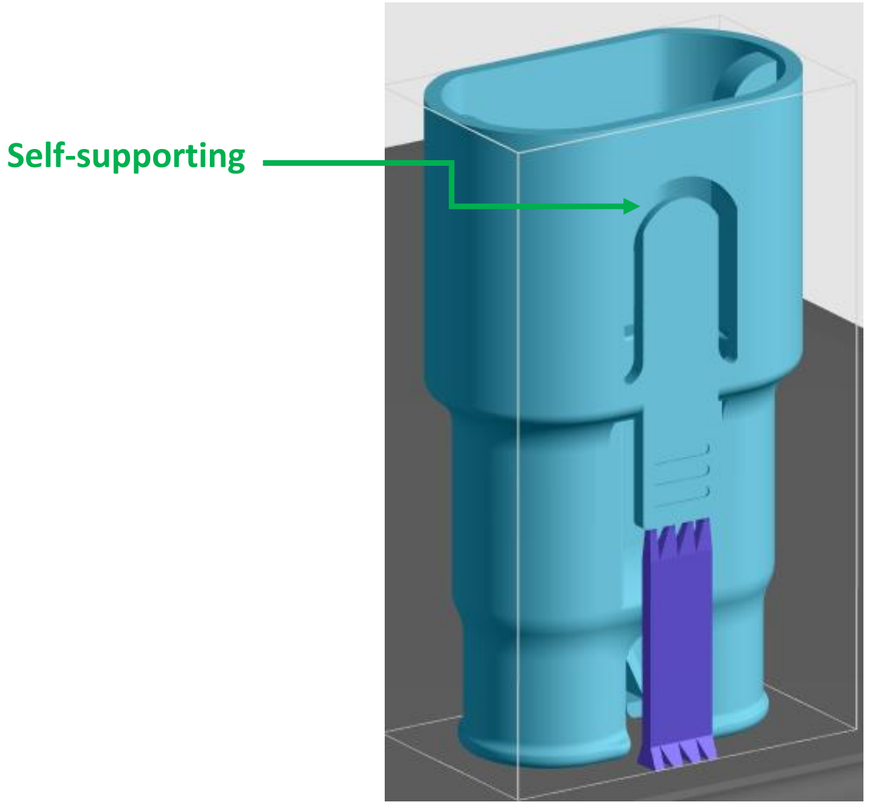

Fig. 2 Iteration 3

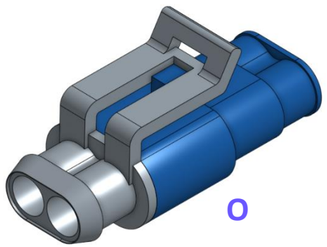

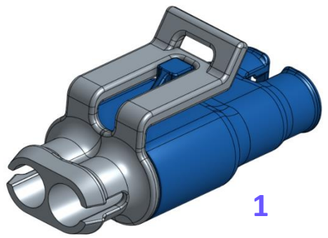

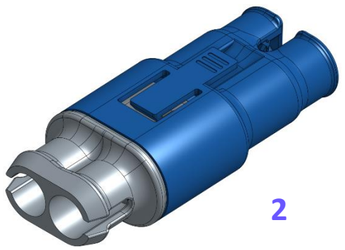

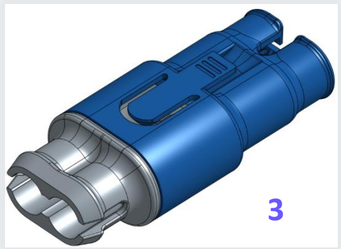

Fillets

Adding fillets instead of a chamfer to the back side of the clip makes engagement smoother.

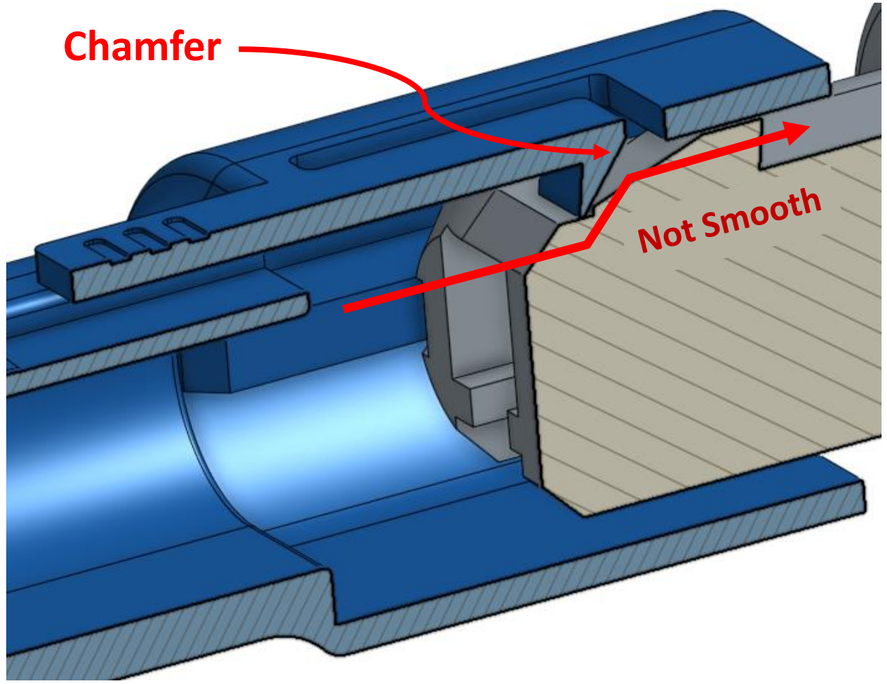

Fig. 1 Iteration 2

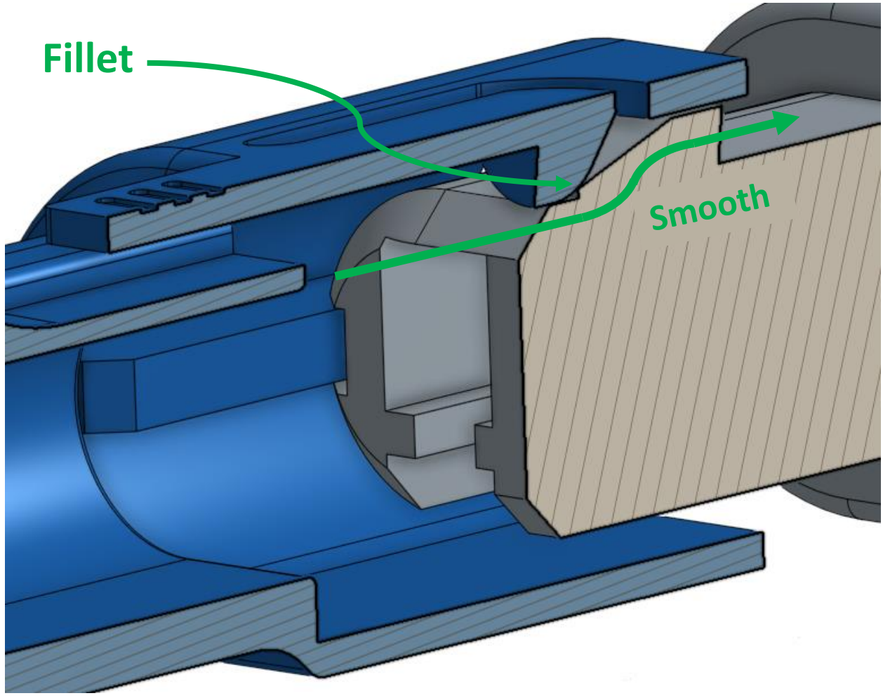

Fig. 2 Iteration 3

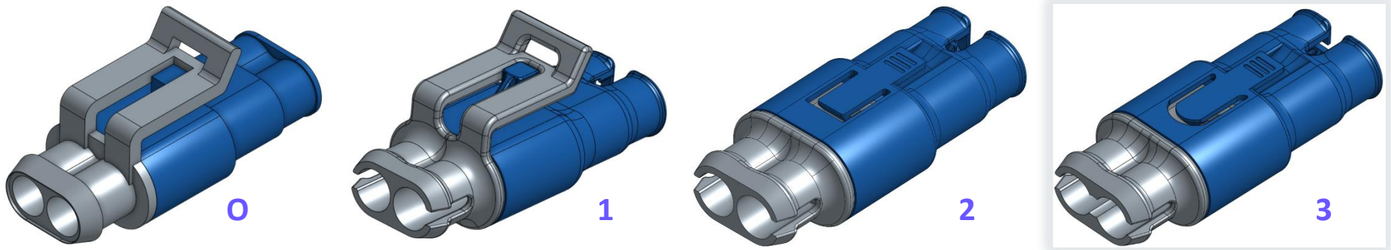

Drain Holes

Drain holes can be improved for even better resin and solvent flow during cleaning.

- Male component: open up the two halves for through flow
- Female component: change holes to slots

Male

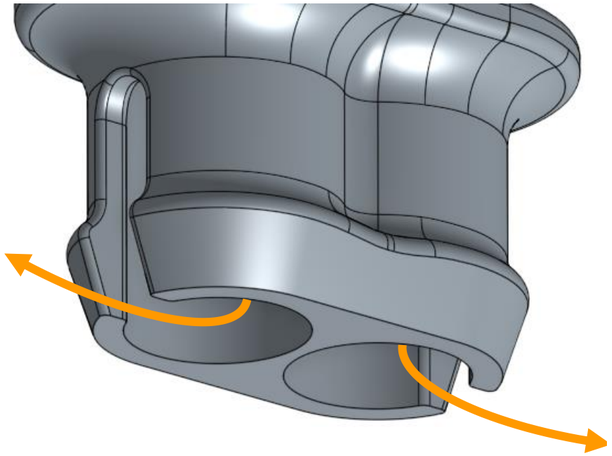

Female

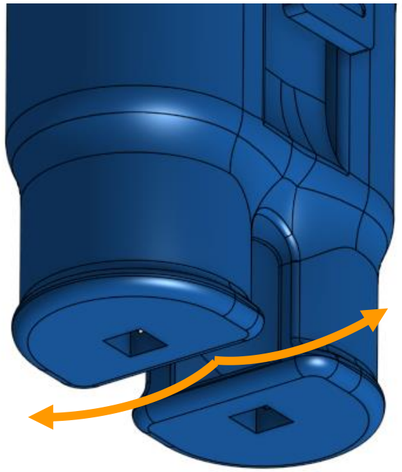

Fig. 1 Iteration 2

Male

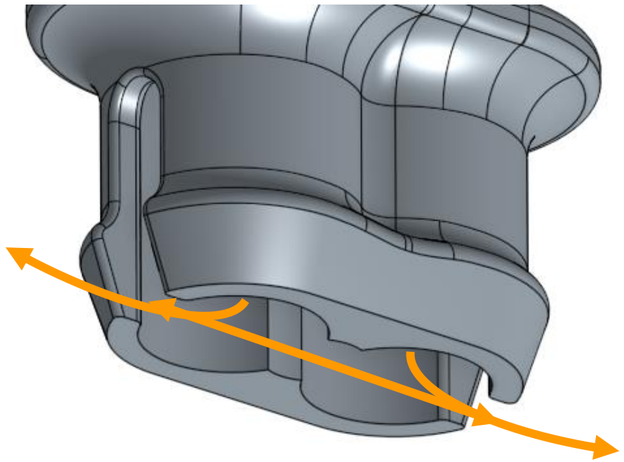

Female

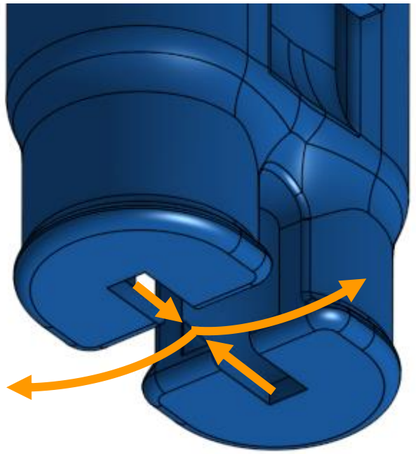

Fig. 2 Iteration 3

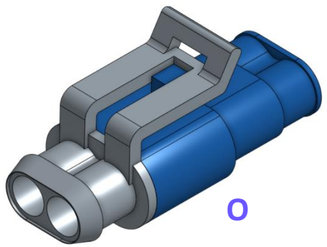

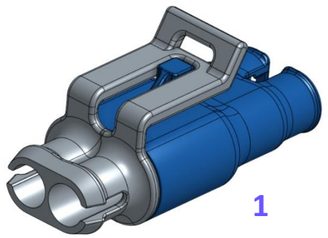

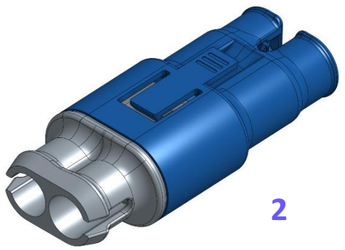

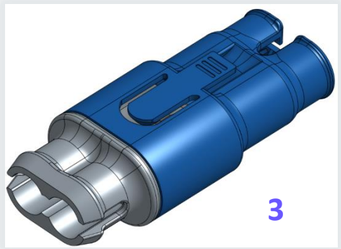

Drain Holes

Layout of print can optimize resin drainage and solvent flow during washing by directing flow around other parts.

(Parts per build also increases.)

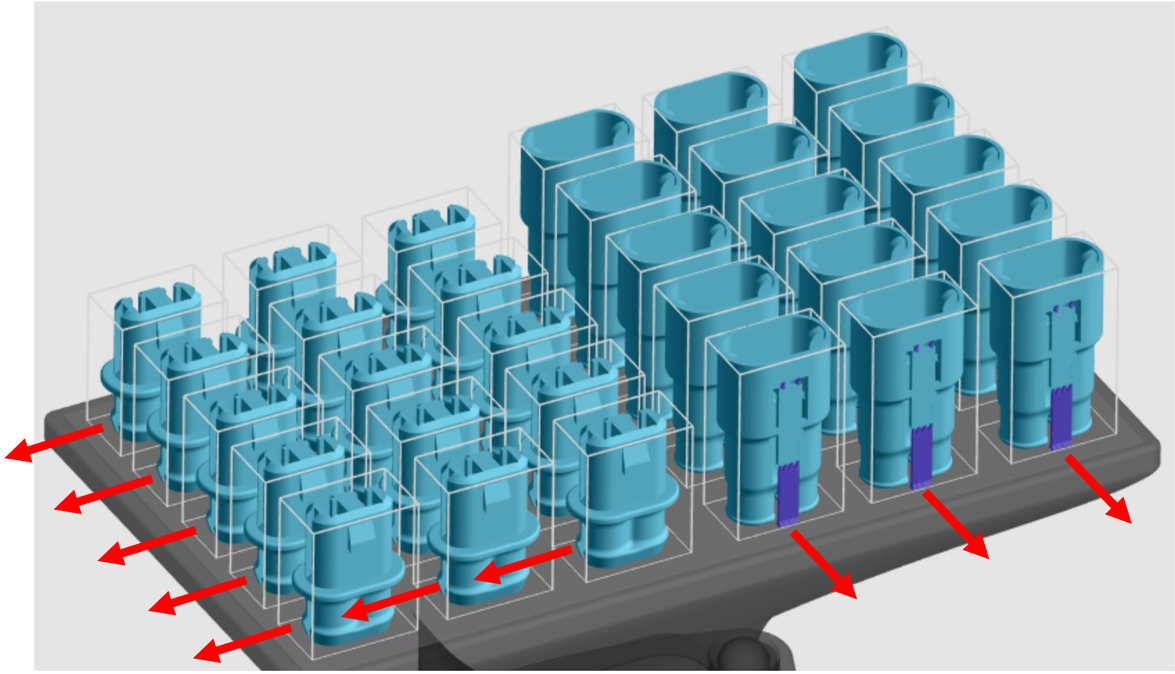

Fig. 1 Iteration 2 – Suboptimal layout

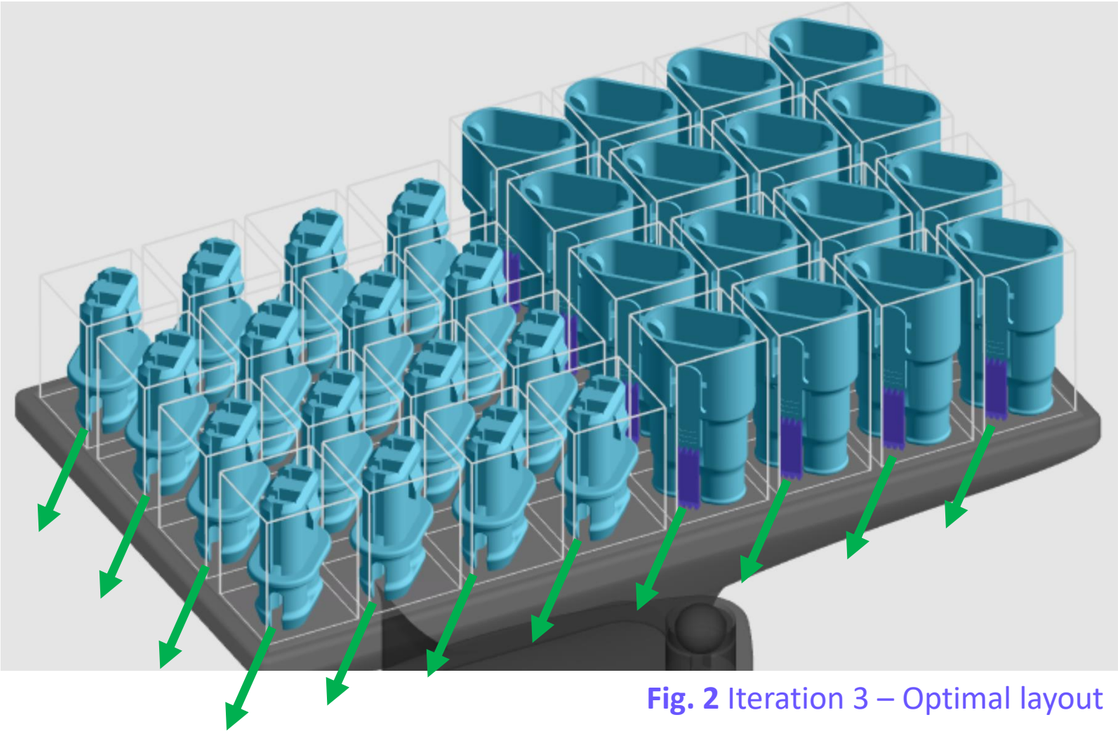

Fig. 2 Iteration 3 – Optimal layout

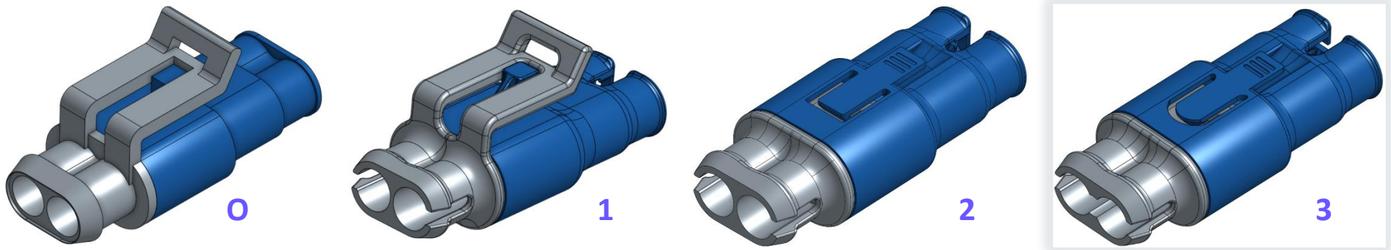

Tolerance Iterations

Features critical to the functional requirements of the connector go through an iteration process in the final stages of design. Accuracy requirements can be addressed at this stage.

- Tolerance iterations **(Fig. 1)**
  - **Clip**
  - **Guides**
  - **Terminal Openings**

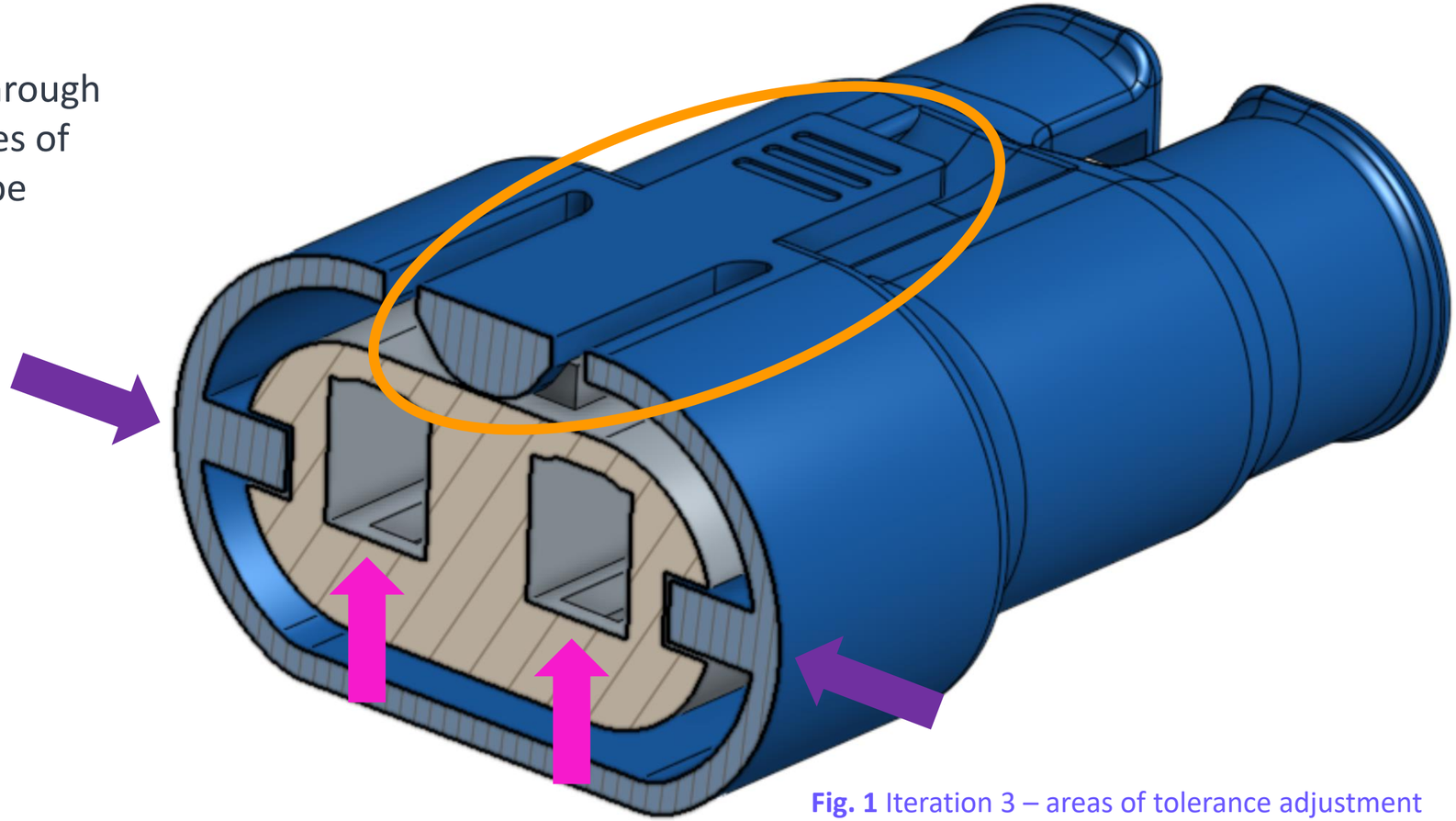

Fig. 1 Iteration 3 – areas of tolerance adjustment

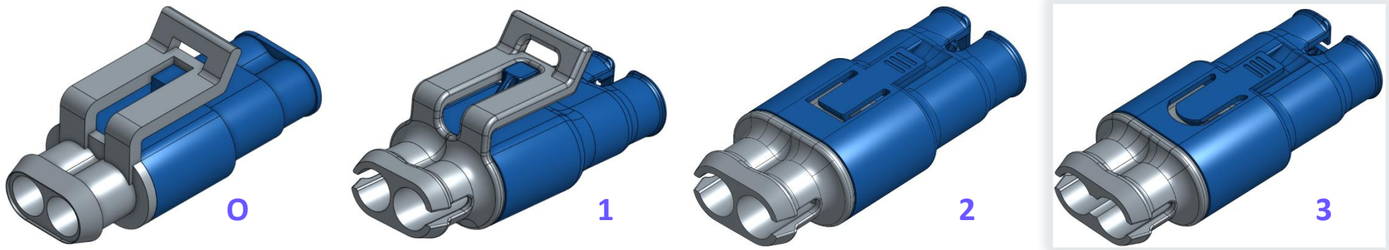

Iterations Summary

Original

- Unvented volumes
- No drainage
- Weak clip
- Stepped design
- Blocky clip catch

Iteration 1

- Provide venting
- Provide drainage
- Strengthen clip
- Gradual cross section changes in print
- Gusseted clip catch

Iteration 2

- Improve clip design
- Reduce mass
- Increase yield
- Improve part stability
- Reduce supports
- Improve engagement

Iteration 3

- Self-supporting clip design (reduce supports)
- Smoother engagement of clip
- Improve drainage
- Iterate tolerance

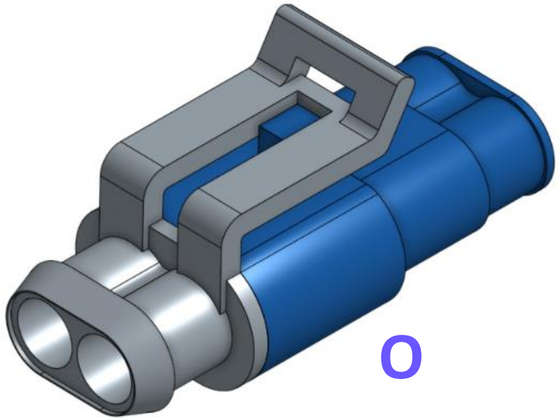

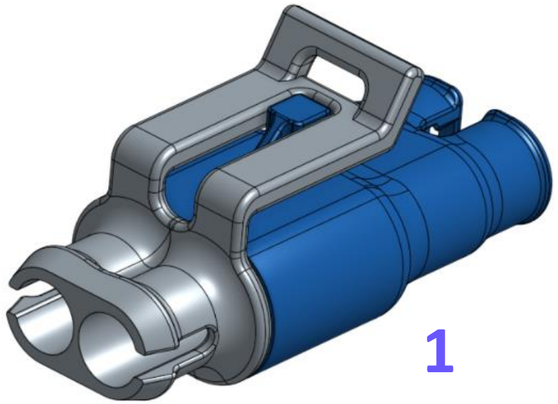

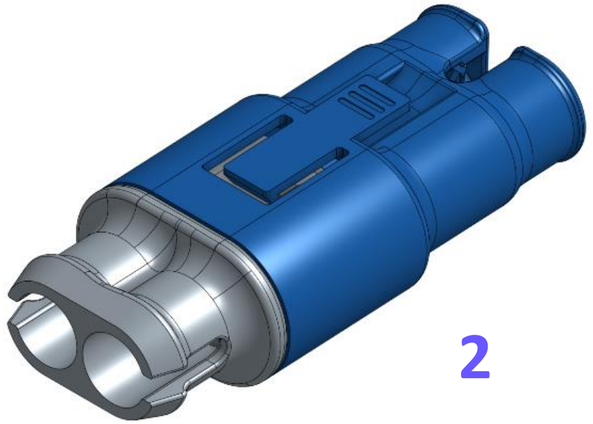

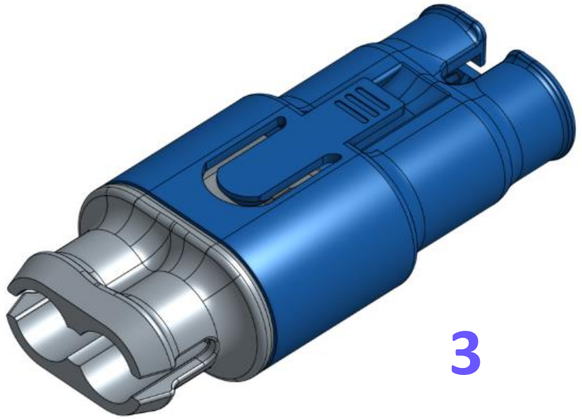

Design Takeaways